US008328738B2

(12) **United States Patent**
Frankhouser et al.

(10) **Patent No.: US 8,328,738 B2**
(45) **Date of Patent: Dec. 11, 2012**

(54) **MEDICAL TOOL FOR REDUCED PENETRATION FORCE WITH FEEDBACK MEANS**

(75) Inventors: **Paul L. Frankhouser**, Orlando, FL (US); **Maureen L. Mulvihill**, Bellefonte, PA (US); **Brian M. Park**, State College, PA (US)

(73) Assignee: **Actuated Medical, Inc.**, Bellefonte, PA (US)

(*) Notice: Subject to any disclaimer, the term of this patent is extended or adjusted under 35 U.S.C. 154(b) by 131 days.

(21) Appl. No.: **12/559,383**

(22) Filed: **Sep. 14, 2009**

(65) **Prior Publication Data**

US 2010/0004558 A1 Jan. 7, 2010

Related U.S. Application Data

(63) Continuation-in-part of application No. 12/163,071, filed on Jun. 27, 2008, now Pat. No. 8,043,229.

(60) Provisional application No. 61/089,756, filed on Sep. 15, 2008, provisional application No. 60/937,749, filed on Jun. 29, 2007.

(51) **Int. Cl.**
A61B 5/103 (2006.01)
A61B 5/117 (2006.01)

(52) **U.S. Cl.** **600/587**

(58) **Field of Classification Search** 600/562–572, 600/587

See application file for complete search history.

(56) **References Cited**

U.S. PATENT DOCUMENTS

4,623,335 A 11/1986 Jackson
4,771,660 A 9/1988 Yacowitz
4,911,161 A 3/1990 Schechter
(Continued)

FOREIGN PATENT DOCUMENTS

WO 2004091693 10/2004
(Continued)

OTHER PUBLICATIONS

International Search Report for related PCT Application No. PCT/US2009/060387, dated May 18, 2010.
(Continued)

Primary Examiner — Jeffrey G Hoekstra
(74) *Attorney, Agent, or Firm* — Metz Lewis Brodman Must O'Keefe LLC; Barry I. Friedman

(57) **ABSTRACT**

A medical device for reducing the force necessary to penetrate living being tissue using a variety of reciprocating motion actuators, including piezoelectric, voice coil, solenoids, pneumatics or fluidics. The reciprocating actuator drives a penetrating member, such as a needle, through the tissue at a reduced force while the device detects the passage of the penetrating member through the tissue. Upon passage of the penetrating member through the tissue, electrical power to the reciprocating actuator is automatically terminated. One exemplary method for detecting this passage is via a fluid-containing syringe that is coupled to a channel within the penetrating member. Once the penetrating member tip has passed through the living tissue, the fluid within the syringe no longer experiences any pressure and a plunger within the syringe displaces indicating passage of the penetrating member tip. This motion can provide direct tactile feedback to an operator of the medical device or can automatically open a switch providing electrical power to the medical device. Alternatively, a pressure transducer can also monitor the pressure within the penetrating member channel and automatically activate the switch to cut off the electrical power.

30 Claims, 41 Drawing Sheets

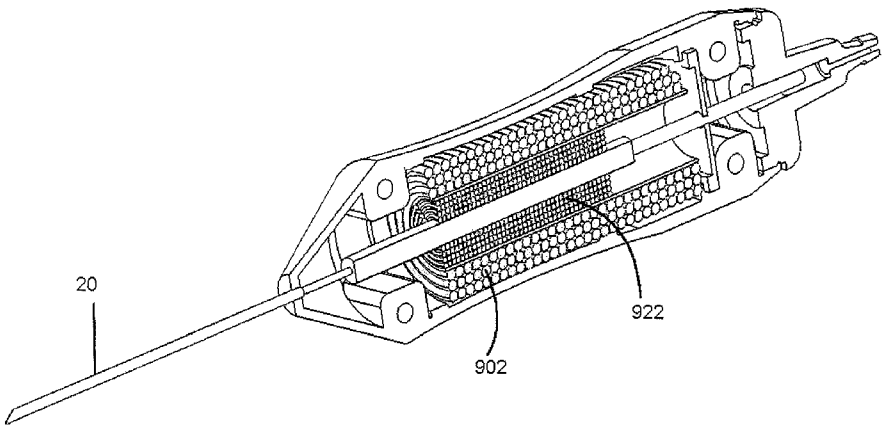

U.S. PATENT DOCUMENTS

5,024,662	A		6/1991	Menes et al.
5,403,276	A		4/1995	Schechter et al.
5,449,370	A		9/1995	Vaitekunas
5,471,102	A		11/1995	Becker et al.
5,575,789	A		11/1996	Bell et al.
5,681,283	A		10/1997	Brownfield
5,728,089	A		3/1998	Lal et al.
5,728,130	A		3/1998	Ishikawa et al.
5,729,077	A		3/1998	Newnham et al.
5,840,026	A		11/1998	Uber, III et al.
5,885,226	A		3/1999	Rubinstein et al.
6,019,775	A		2/2000	Sakurai
6,019,776	A		2/2000	Preissman et al.
6,068,604	A	*	5/2000	Krause et al. 600/587
6,096,004	A		8/2000	Meglan et al.
6,245,028	B1		6/2001	Furst et al.
6,273,861	B1		8/2001	Bates et al.
6,379,371	B1		4/2002	Novak et al.
6,423,014	B1		7/2002	Churchill et al.
6,443,910	B1		9/2002	Krueger et al.
6,465,936	B1		10/2002	Knowles et al.
6,491,708	B2		12/2002	Madan et al.
6,497,714	B1		12/2002	Ishikawa et al.
6,514,267	B2		2/2003	Jewett
6,602,229	B2		8/2003	Coss
6,673,086	B1		1/2004	Hofmeier et al.
6,689,087	B2		2/2004	Pal et al.
6,718,196	B1		4/2004	Mah et al.
6,726,698	B2		4/2004	Cimino
6,730,043	B2		5/2004	Krueger et al.
6,785,572	B2		8/2004	Yanof et al.
6,817,973	B2		11/2004	Merril et al.
6,869,439	B2		3/2005	White et al.
6,939,317	B2		9/2005	Zacharias
6,942,677	B2		9/2005	Nita et al.
6,984,220	B2		1/2006	Wuchinich
7,018,343	B2		3/2006	Plishka
7,025,774	B2		4/2006	Freeman et al.
7,206,626	B2		4/2007	Quaid, III
7,297,131	B2		11/2007	Nita
7,335,997	B2		2/2008	Wiener
7,364,567	B2		4/2008	Beyerlein
7,374,544	B2	*	5/2008	Freeman et al. 600/583
7,518,479	B2		4/2009	Mask et al.
7,648,468	B2		1/2010	Boecker et al.
7,651,475	B2		1/2010	Angel et al.
7,651,490	B2		1/2010	Boukhny et al.
7,654,825	B2		2/2010	Ray
7,776,027	B2	*	8/2010	Manna et al. 606/169
2001/0014785	A1		8/2001	Sussman et al.
2002/0026127	A1		2/2002	Balbierz et al.
2002/0183774	A1		12/2002	Witt et al.
2002/0198555	A1		12/2002	White et al.
2003/0078495	A1		4/2003	Goodwin
2003/0109871	A1		6/2003	Johnson et al.
2003/0195468	A1		10/2003	Lal et al.
2003/0199899	A1		10/2003	Boecker et al.
2004/0106894	A1		6/2004	Hunter et al.
2004/0260240	A1		12/2004	Beyerlein
2006/0058783	A1		3/2006	Buchman, III
2006/0142657	A1		6/2006	Quaid et al.
2006/0149141	A1		7/2006	Sheets
2007/0063618	A1		3/2007	Bromfield
2007/0142766	A1		6/2007	Sundar et al.
2007/0191758	A1		8/2007	Hunter et al.
2007/0219496	A1		9/2007	Kamen et al.
2007/0250113	A1		10/2007	Hegeman et al.
2008/0021490	A1		1/2008	Briggs et al.
2008/0103413	A1		5/2008	Cicenas et al.
2008/0139961	A1		6/2008	Slama et al.
2008/0228104	A1		9/2008	Uber et al.
2009/0069712	A1		3/2009	Mulvihill et al.
2009/0247865	A1		10/2009	Spohn et al.
2010/0010505	A1		1/2010	Herlihy et al.
2010/0036245	A1		2/2010	Yu et al.

FOREIGN PATENT DOCUMENTS

WO	2008/097609	8/2008
WO	2009/083600	7/2009
WO	2009/092164	7/2009
WO	2009/097621	8/2009

OTHER PUBLICATIONS

Meyer Jr., R.J., et al., "Displacement Amplification of Electroactive Materials Using the Cymbal Flextensional Transducer", Sensors and Actuators A 87 (2001) 157-162.

Podder, T.K., et al., "Effects of Velocity Modulation During Surgical Needle Insertion", Proceedings of the 2005 IEEE, Engineering in Medicine and Biology 27th Annual Conference, Sep. 1-4, 2005.

Smith, N.B., et al., "Rectangular Cymbal Arrays for Improved Ultrasonic Transdermal Insulin Delivery", J. Acoust. Soc. Am., vol. 122, Issue 4, Oct. 2007.

Yang, M., et al., "Microneedle Insertion Force Reduction Using Vibratory Actuation", Biomedical Microdevices 6:3, 177-182, 2004.

Zorcolo, et al., "Catheter Insertion Simulation With Combined Visual and Haptic Feedback", Center for Advanced Studies, Research and Development in Sardinia, 09101 Uta (CA) Italy.

International Search Report for corresponding PCT Application No. PCT/US2009/056864, dated Apr. 26, 2010.

Piccin, et al., "A Robotized Needle Insertion Device for Percutaneous Procedures", Proceedings of IDETC/CIE 2005, 2006 ASME International Design Engineering Technical Conferences and Computers and Information in Engineering Conference, Long Beach, California, USA, Sep. 24-28, 2005.

Loeffel, et al., "Development of an Advanced Injection Device for Highly Viscous Materials", European Cells and Materials, vol. 11, Suppl. 1, 2006, p. 51.

Dario, et al., "Smart Surgical Tools and Augmenting Devices", IEEE Transactions on Robotics and Automation, vol. 19, No. 5, Oct. 2003, pp. 782-792.

"Sonic Drill Could Go Into Space", R&D, Sep. 2000, p. 135.

Goethals, P., "Tactile Feedback for Robot Assisted Minimally Invasive Surgery: An Overview", Division PMA, Department of Engineering, K.U. Leuven, Jul. 14, 2008.

Zorcolo, et al., "Catheter Insertion Simulation with Combined Visual and Haptic Feedback", Center for Advanced Studies, Research and Development in Sardinia, 09101 Uta (CA) Italy; Proceedings of The First PHANToM Users Research Symposium, May 21-22, 1999, Deutsches Krebsfordschungszentrum, Heidelberg, Germany.

"Mark V ProVis Angiographic Injection System", Medrad, Inc., Copyright 2006-2010.

Kwon, et al., Realistic Force Reflection in the Spine Biopsy Simulator, IEEE International Conference on Robotics and Automation, 2001. Proceedings 2001 ICRA, May 21-26, 2001, Seoul, Korea 2001, vol. 2, 1358-1363.

Hing, et al., "Reality-Based Estimation of Needle and Soft-tissue Interaction for Accurate Haptic Feedback in Prostate Brachytherapy Simulation", In International Symposium of Robotics Research, San Francisco, CA, Oct. 12-15, 2005.

* cited by examiner

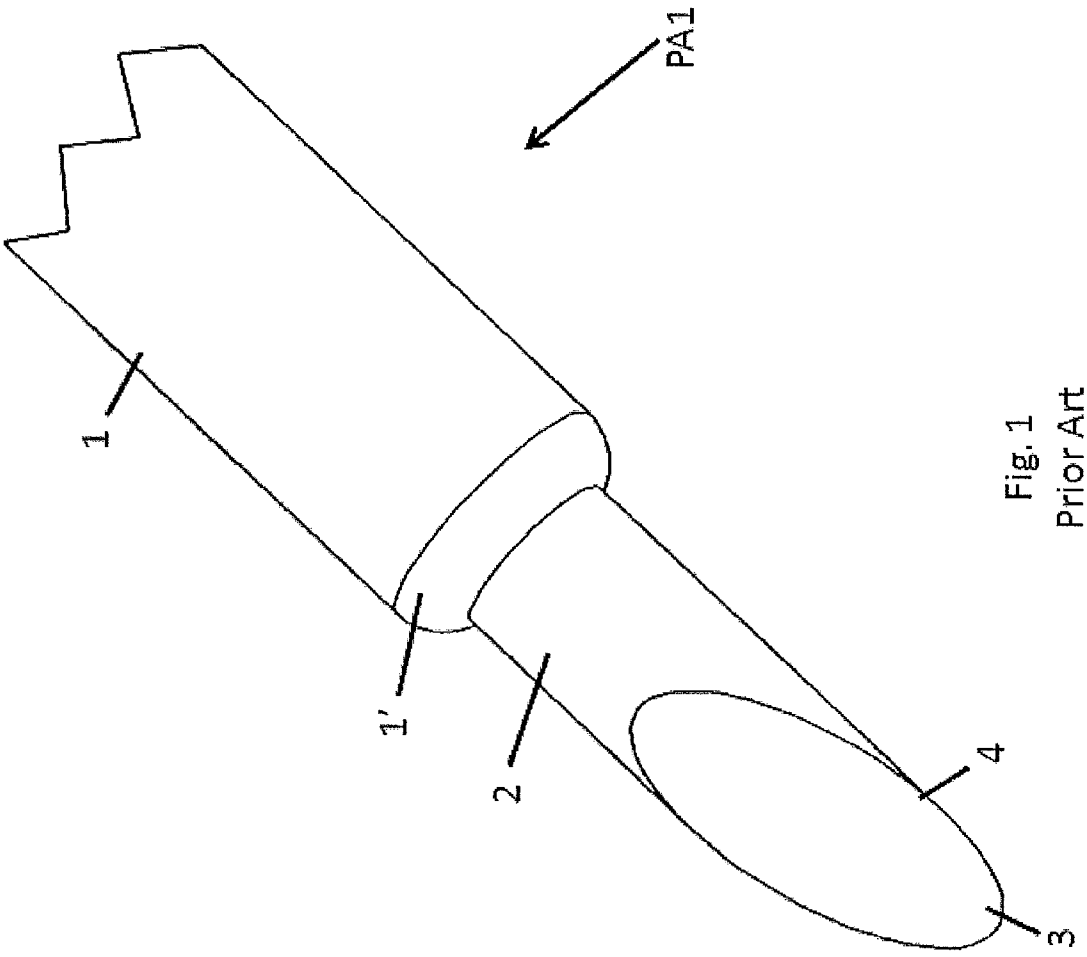

Fig. 1
Prior Art

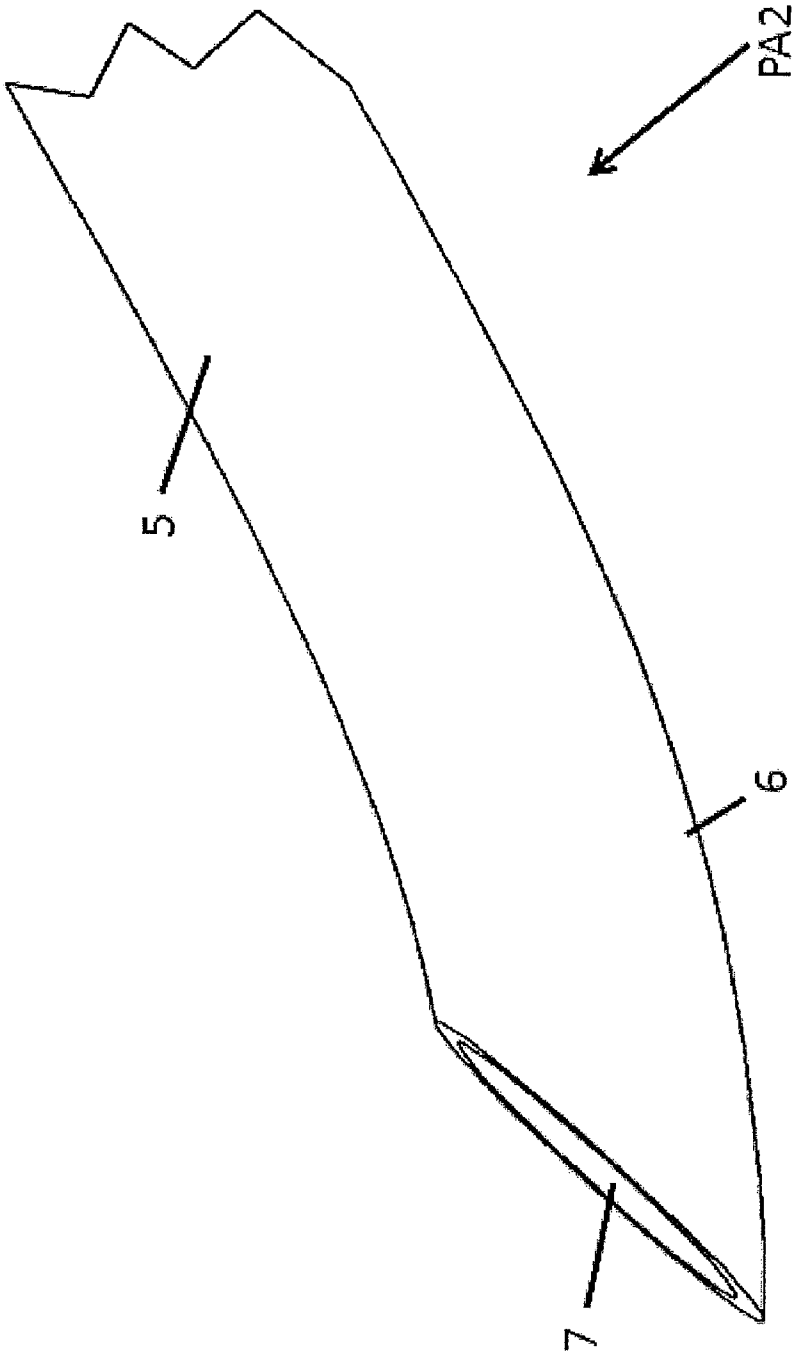

Fig. 2
Prior Art

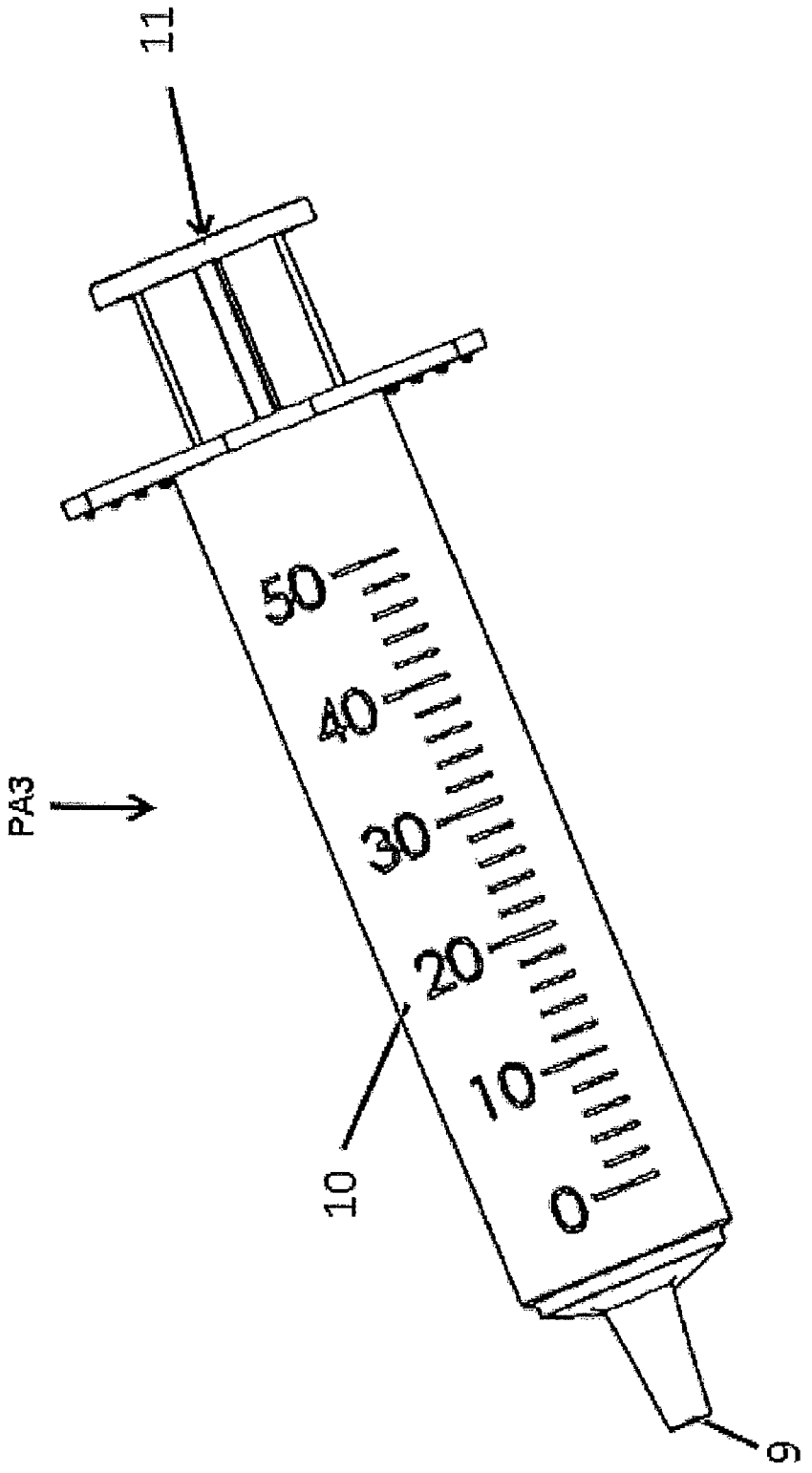

Fig. 2a
Prior Art

A
B
300
250
200
150
100
50
0
Force [Newtons]
0
2
4
6
8
10
12
Depth [millimeters]

Fig. 3

Fig. 4

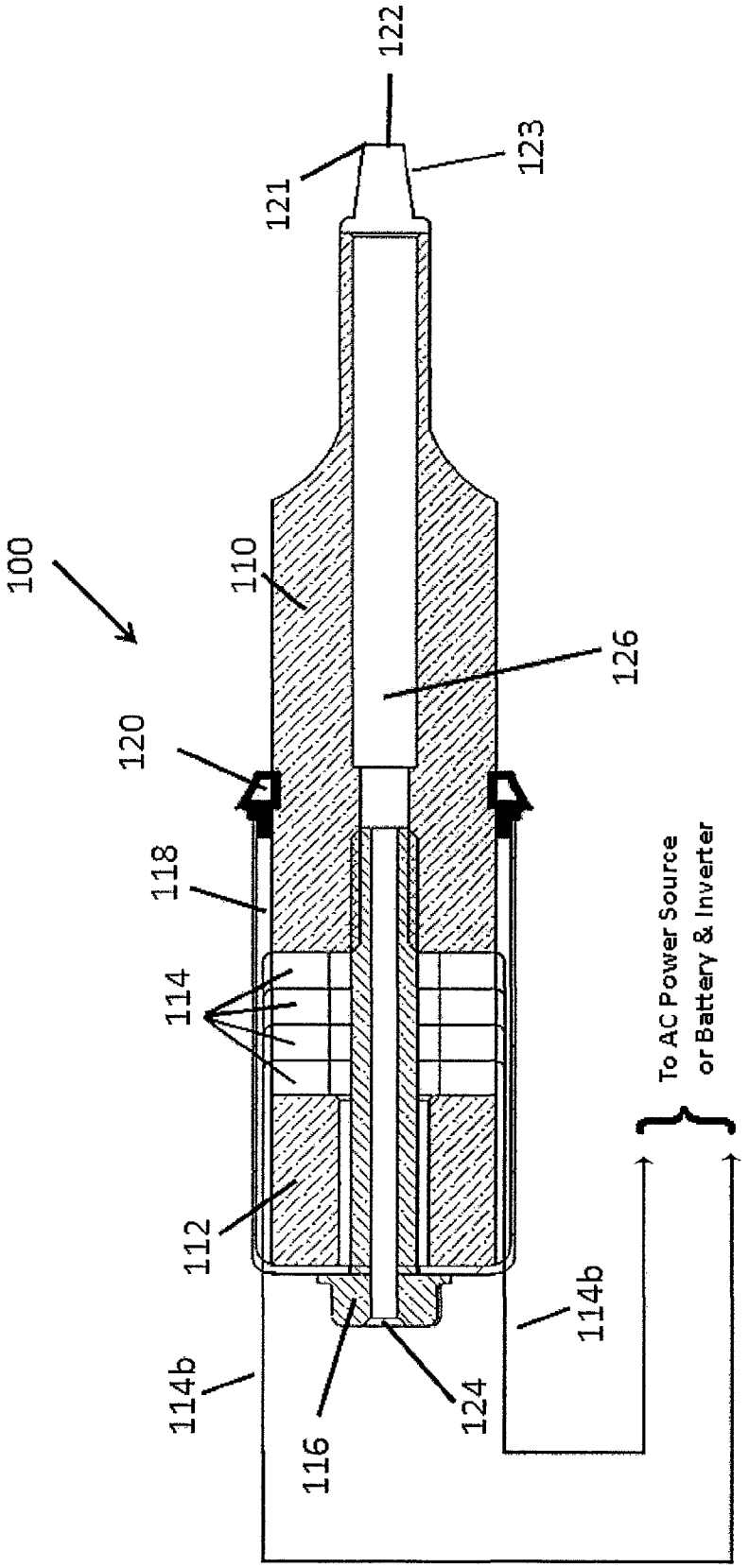
122
123
121
100
110
126
120
118
114
112
114b
116
124
114b
To AC Power Source
or Battery & Inverter

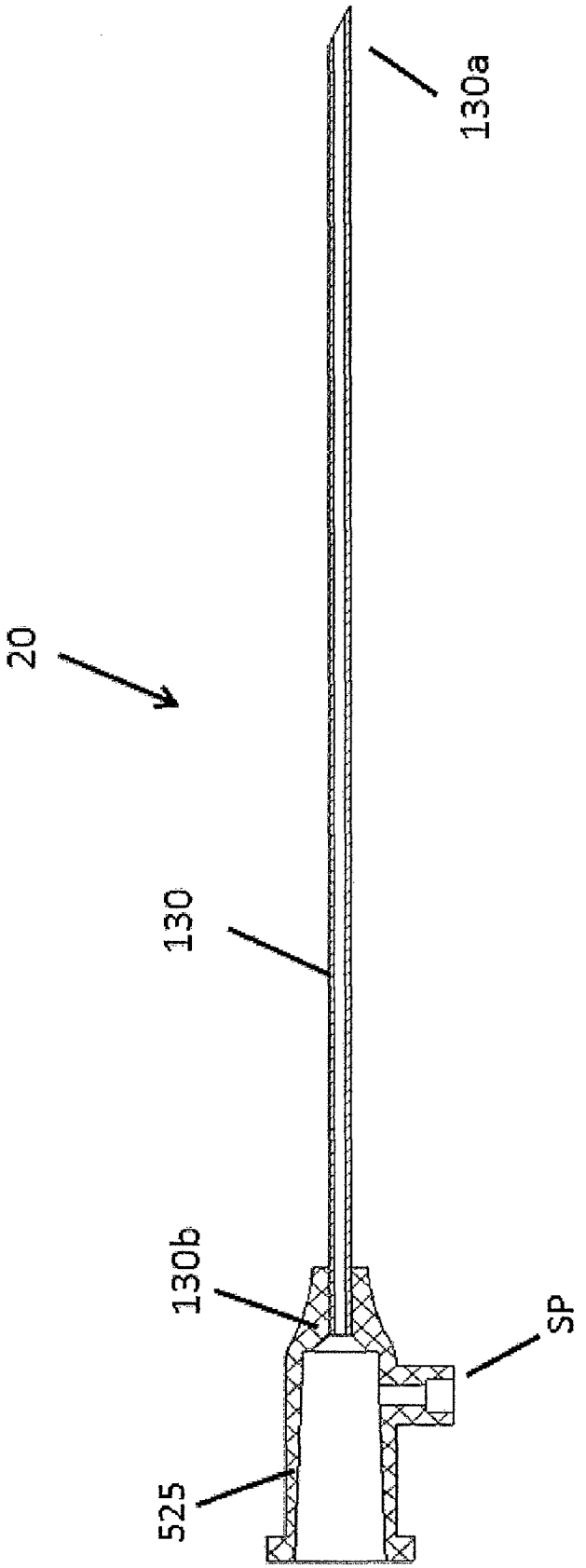

Fig. 4a

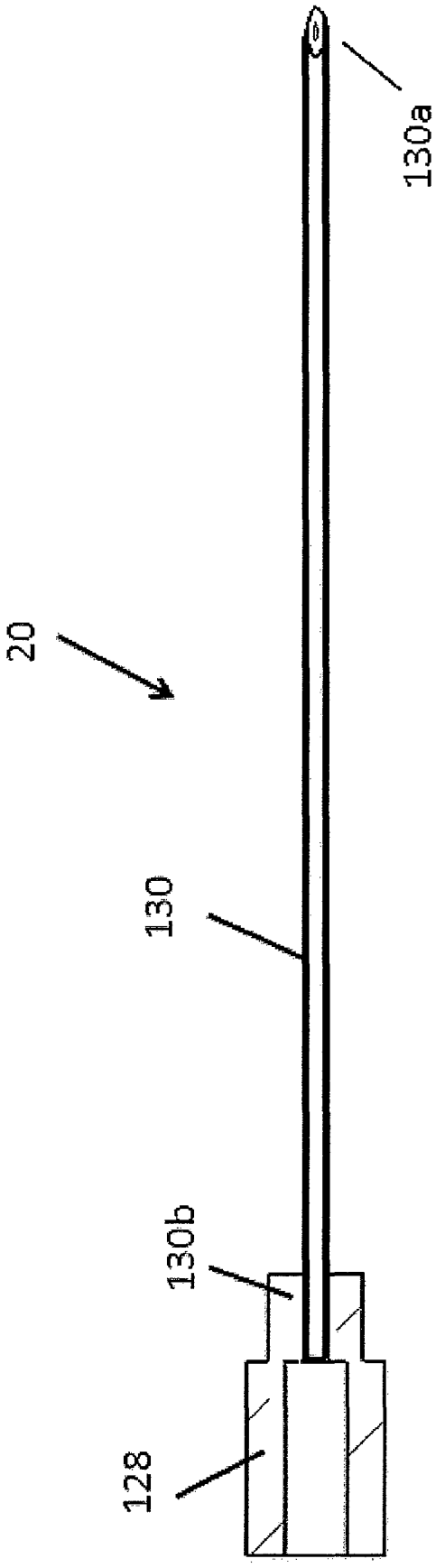

Fig. 5

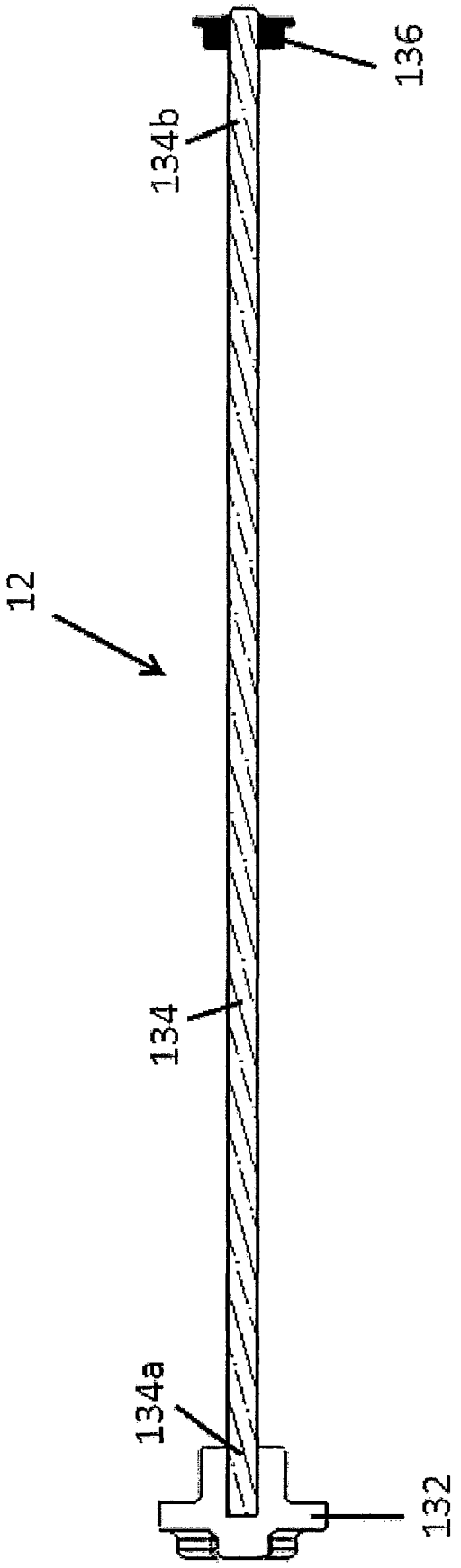

Fig. 6

Fig. 6a

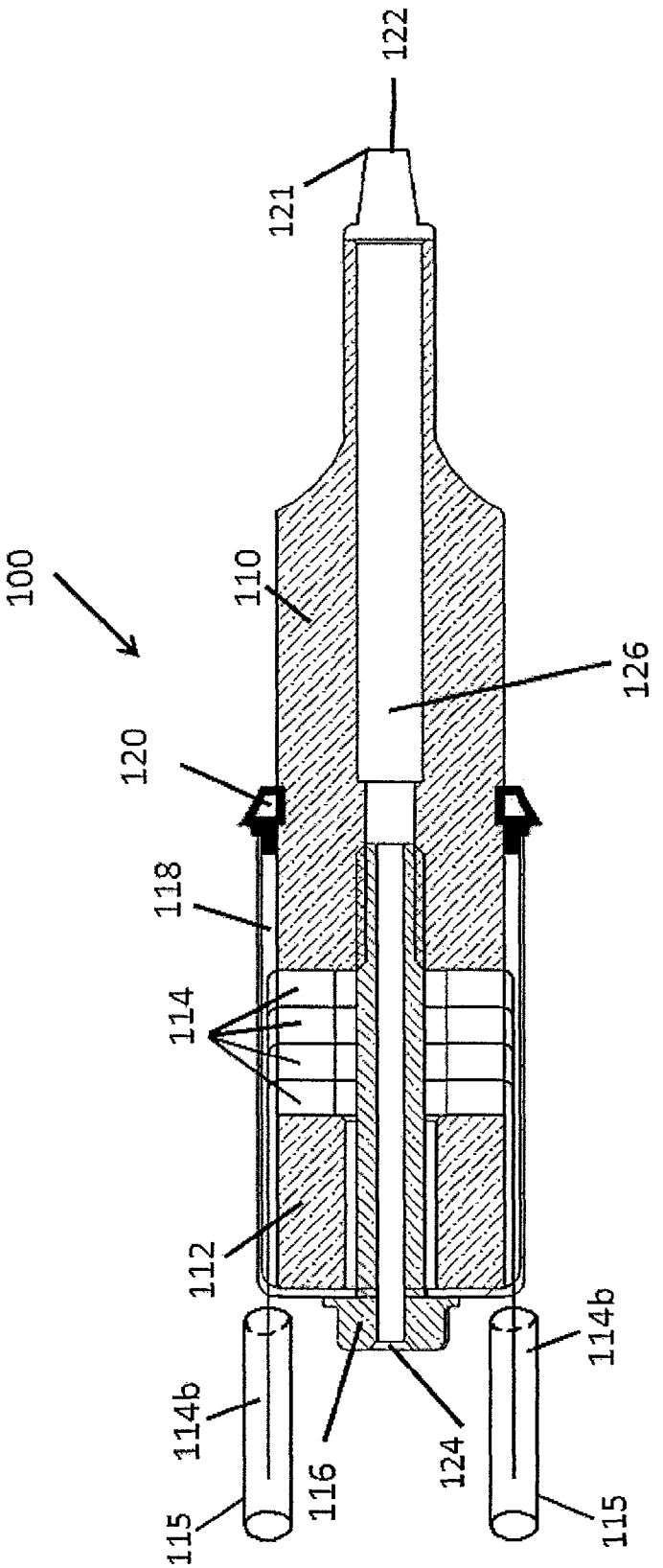

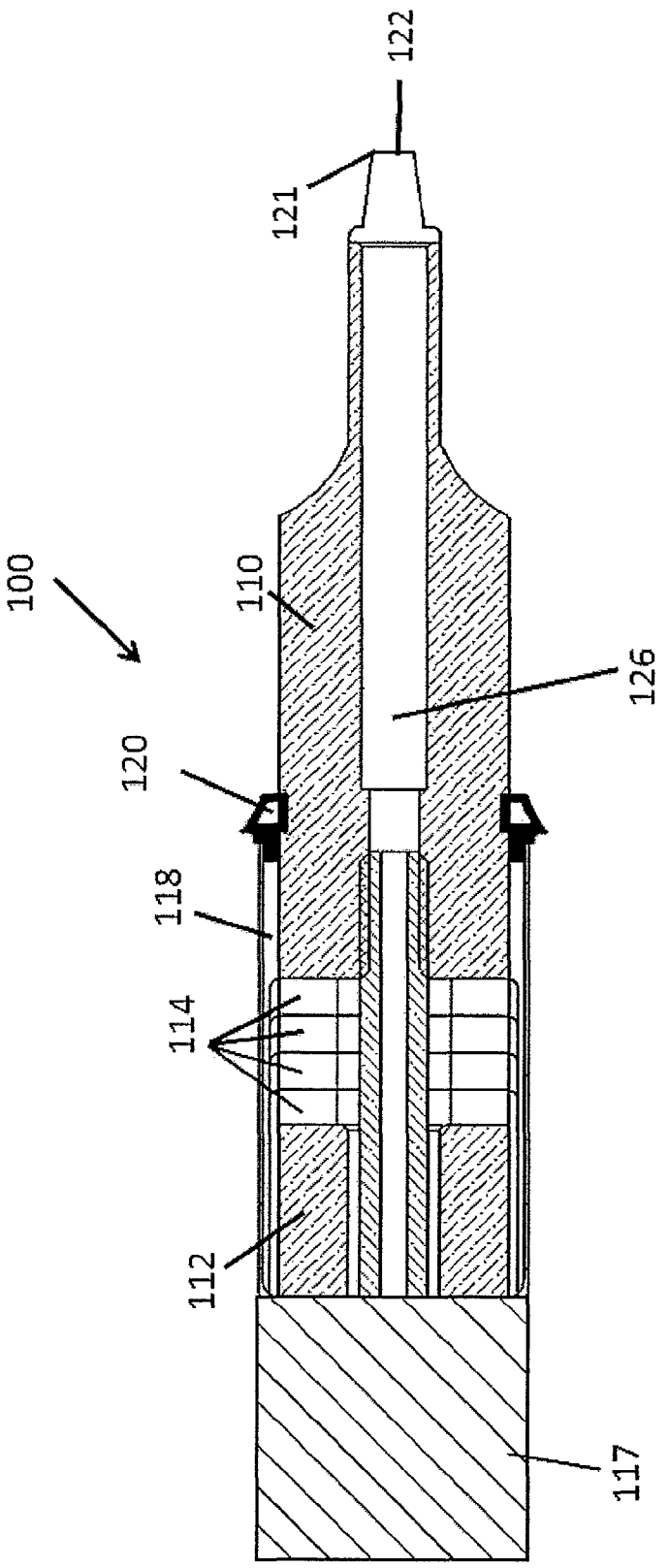

Fig. 6b

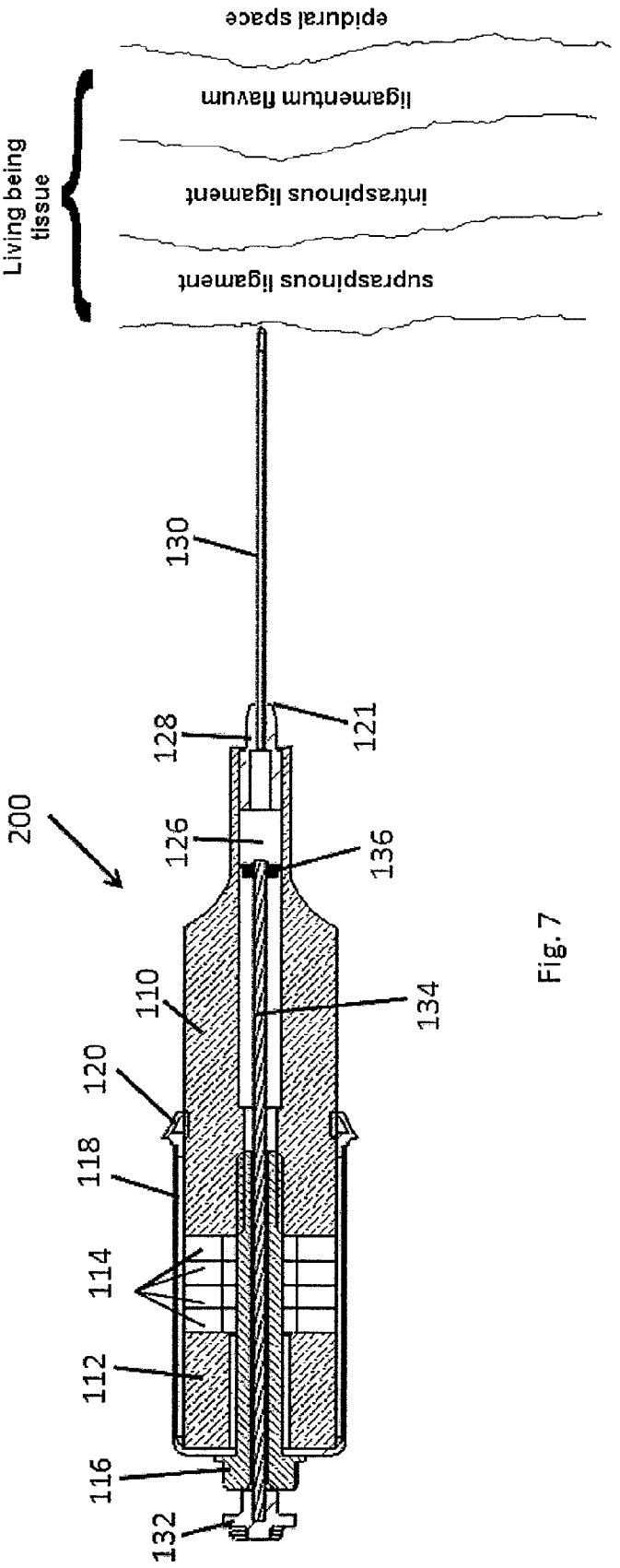
epidural space
ligamentum flavum
interspinous ligament
supraspinous ligament
Living being tissue
130
128
121
200
126
136
110
134
120
118
114
112
116
132

Fig. 7

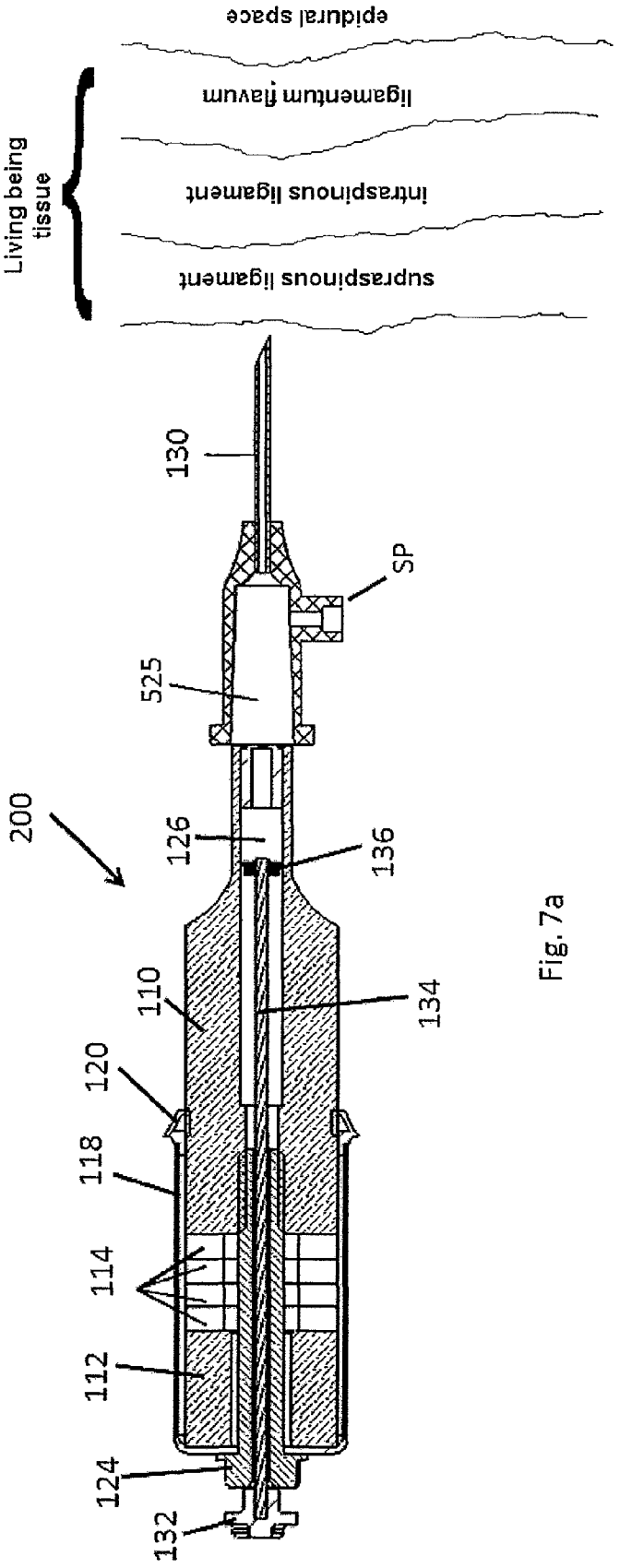
epidural space
ligamentum flavum
interspinous ligament
supraspinous ligament
Living being tissue
130
SP
525
200
126
136
110
134
120
118
114
112
124
132

Fig. 7a

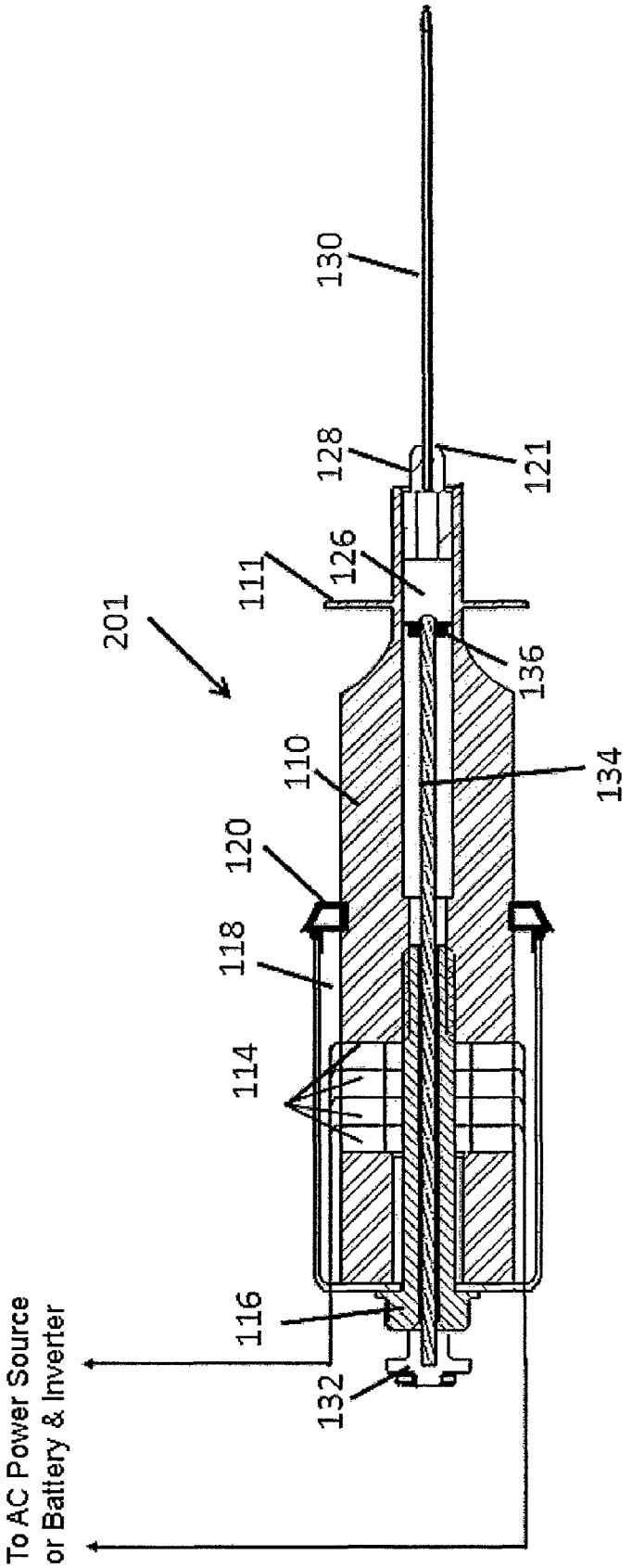
130
128
121
126
111
201
136
110
134
120
118
114
116
132
To AC Power Source
or Battery & Inverter

Fig. 8

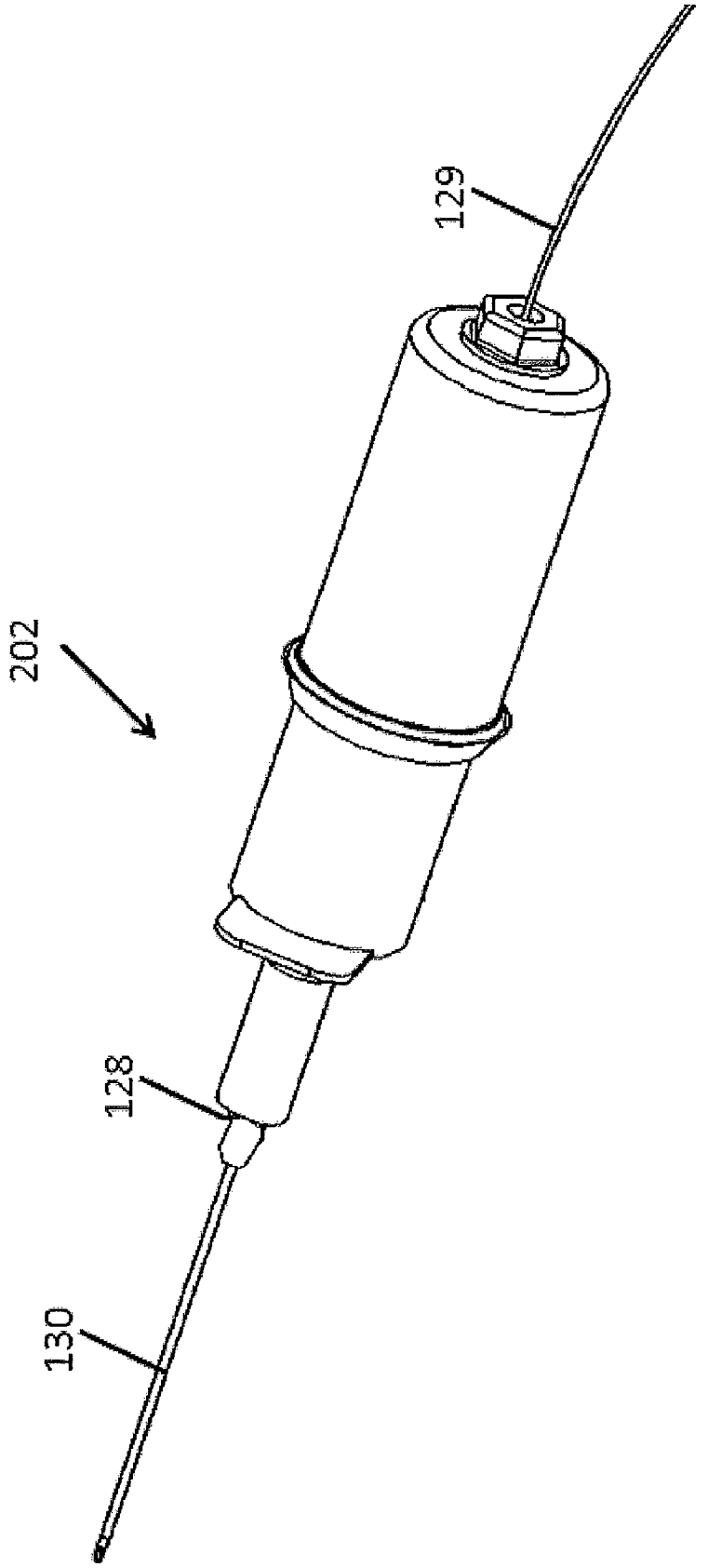

Fig. 9

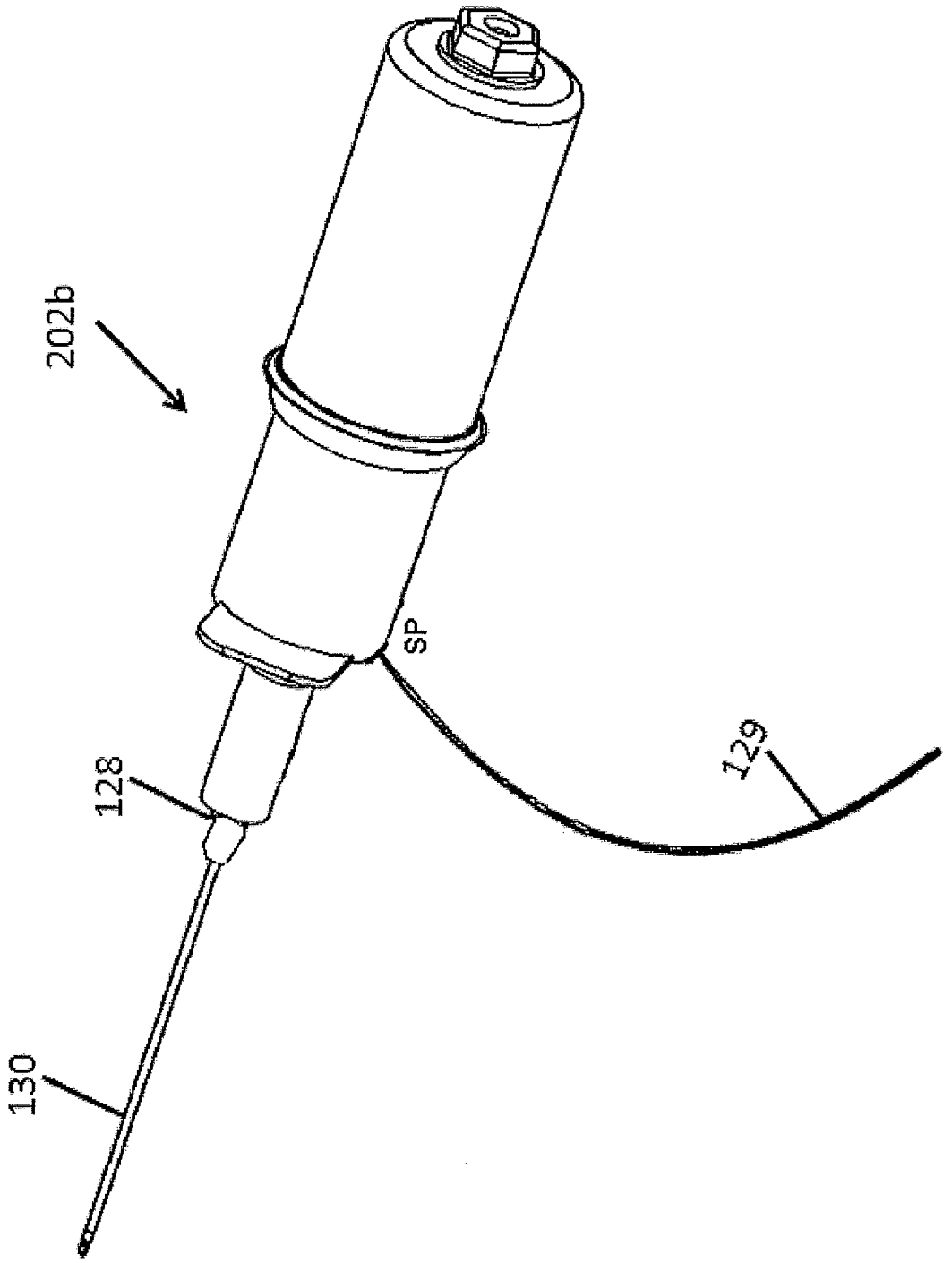

Fig. 9a

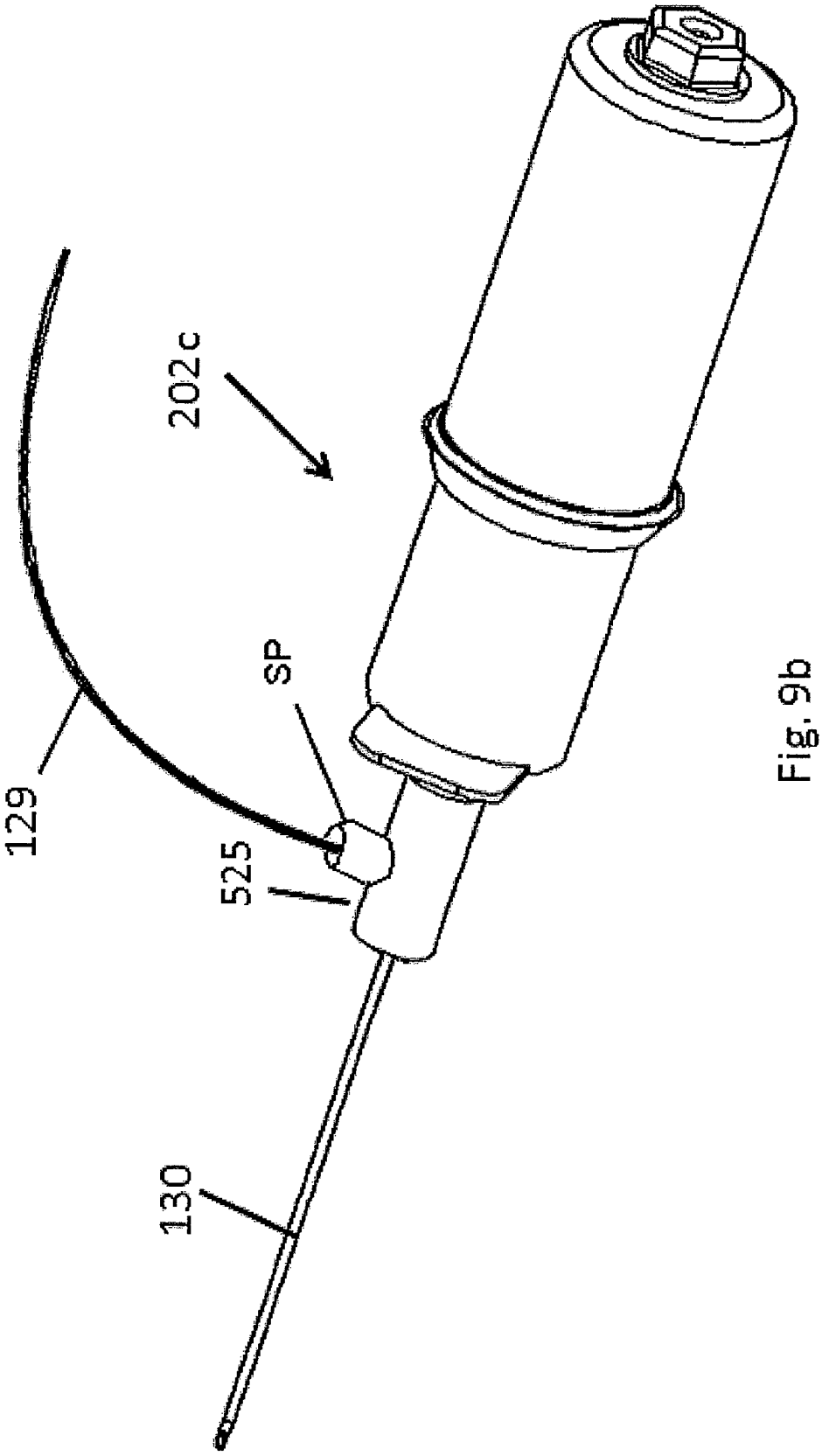

Fig. 9b

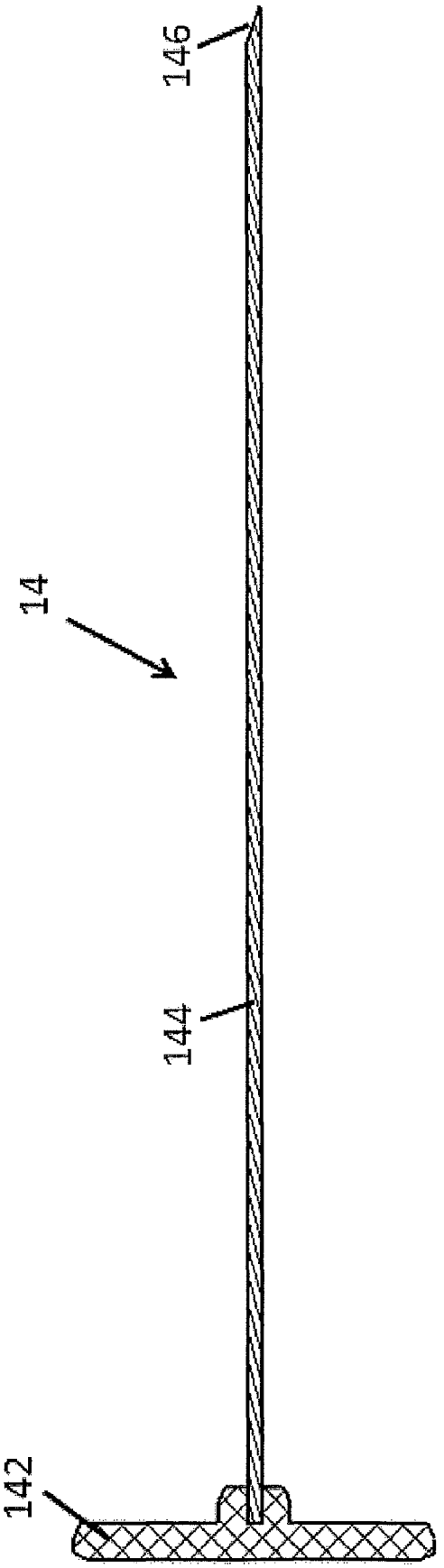

Fig. 10a

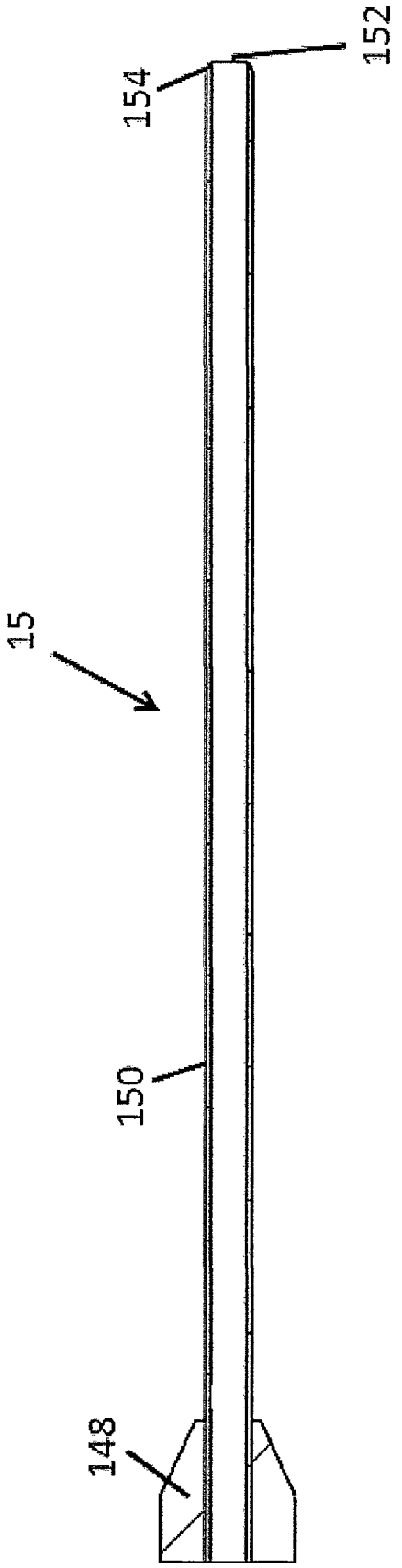

Fig. 10b

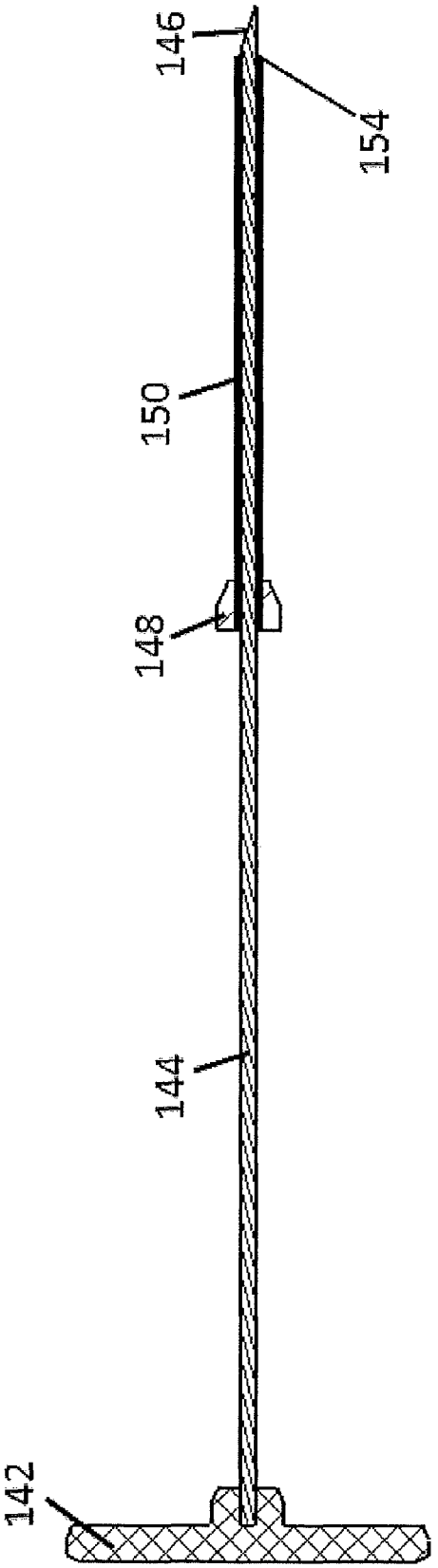

Fig. 10c

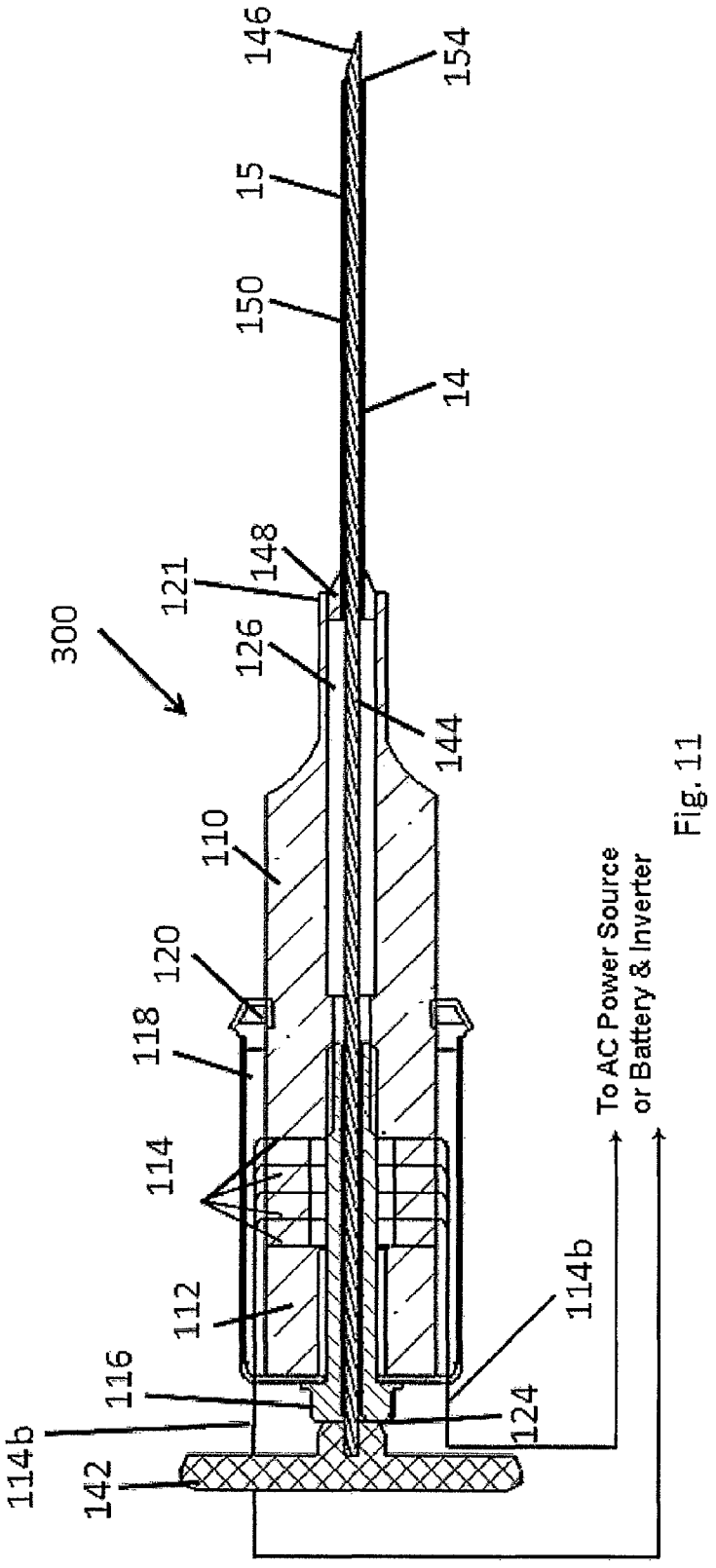
146
154
15
150
14
148
121
300
126
144
110
120
118
114
112
116
114b
142
124
114b
To AC Power Source
or Battery & Inverter

Fig. 11

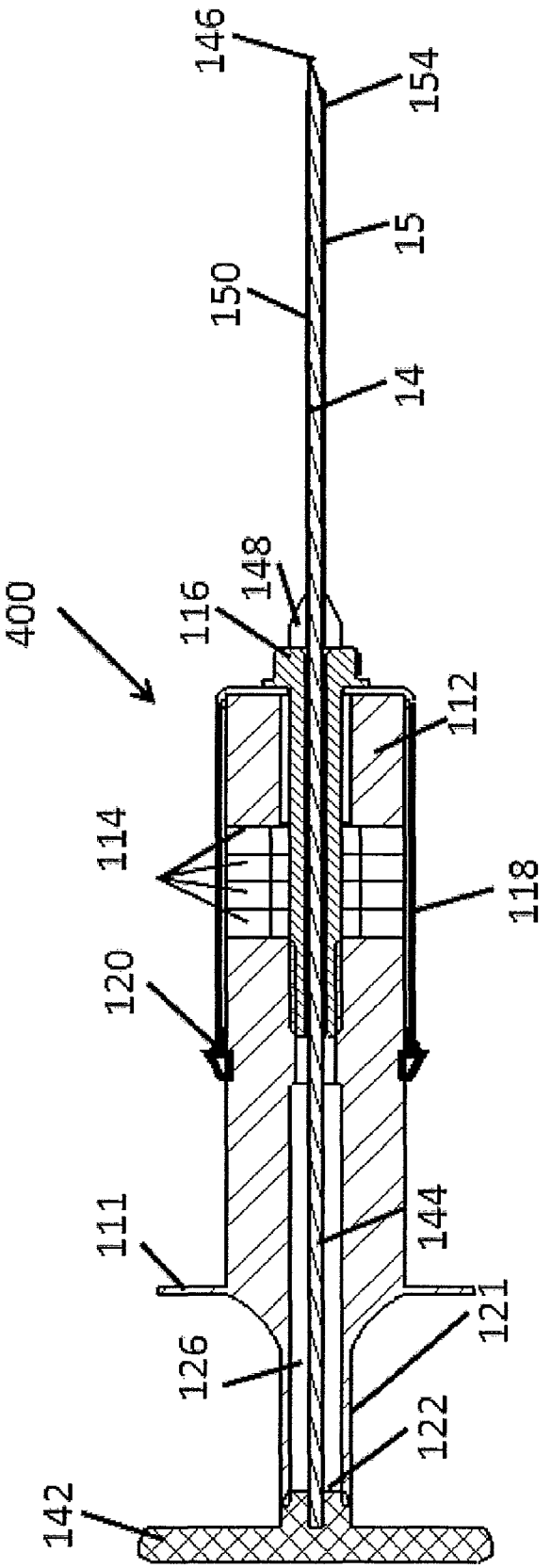
146
154
15
150
14
148
400
116
112
114
118
120
111
144
121
126
122
142

Fig. 12

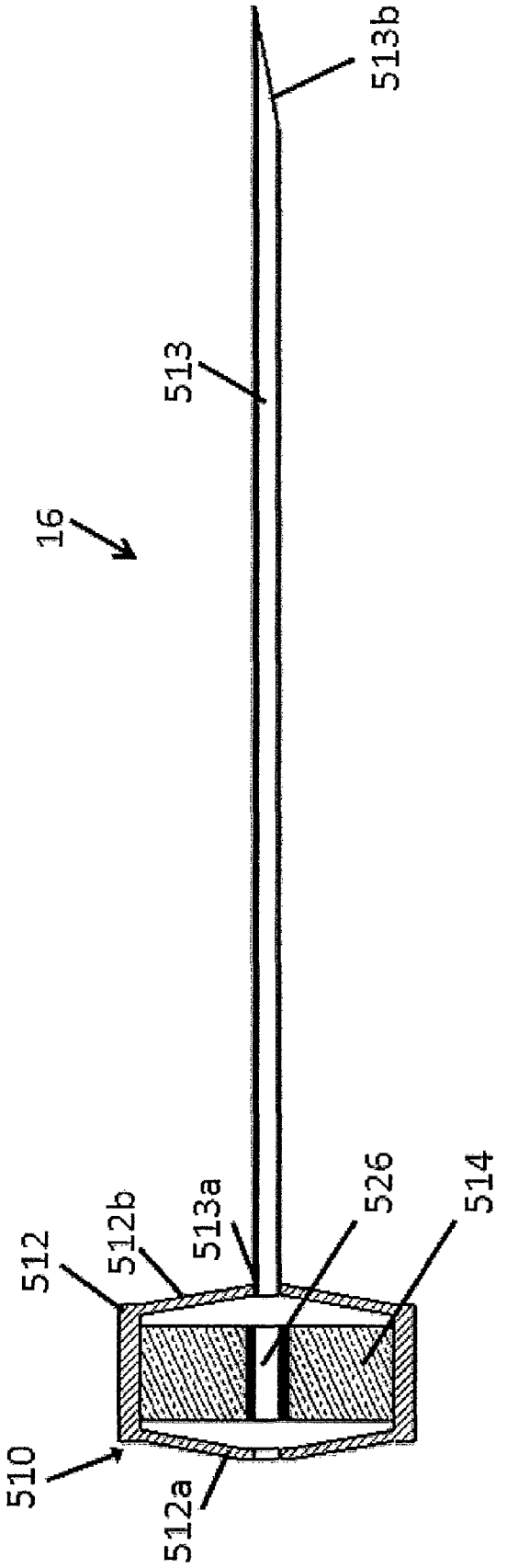

Fig. 13

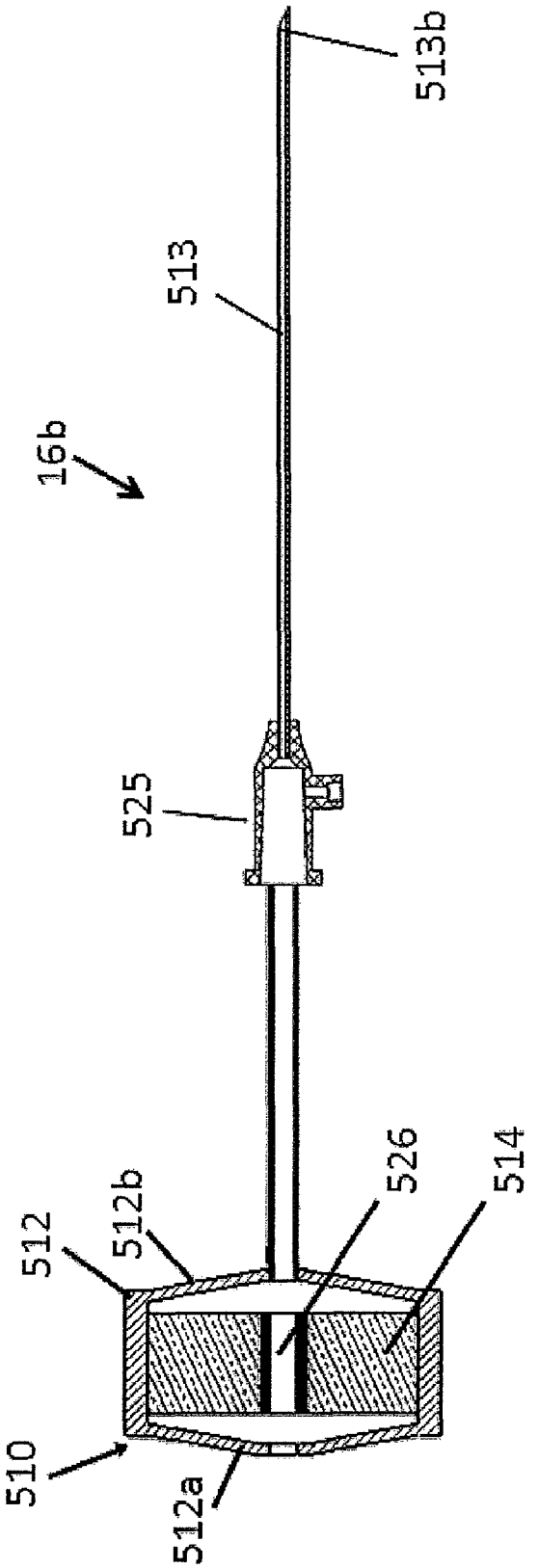

Fig. 13a

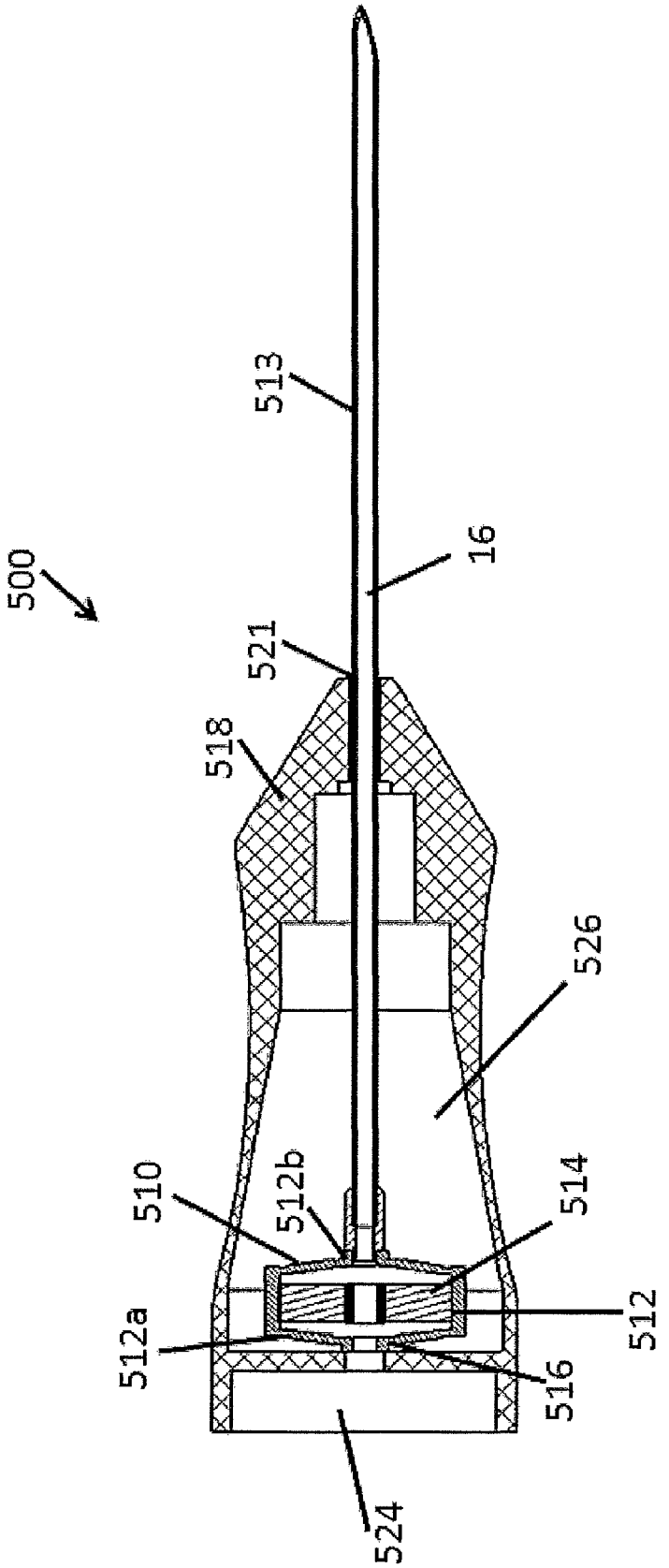

Fig. 14

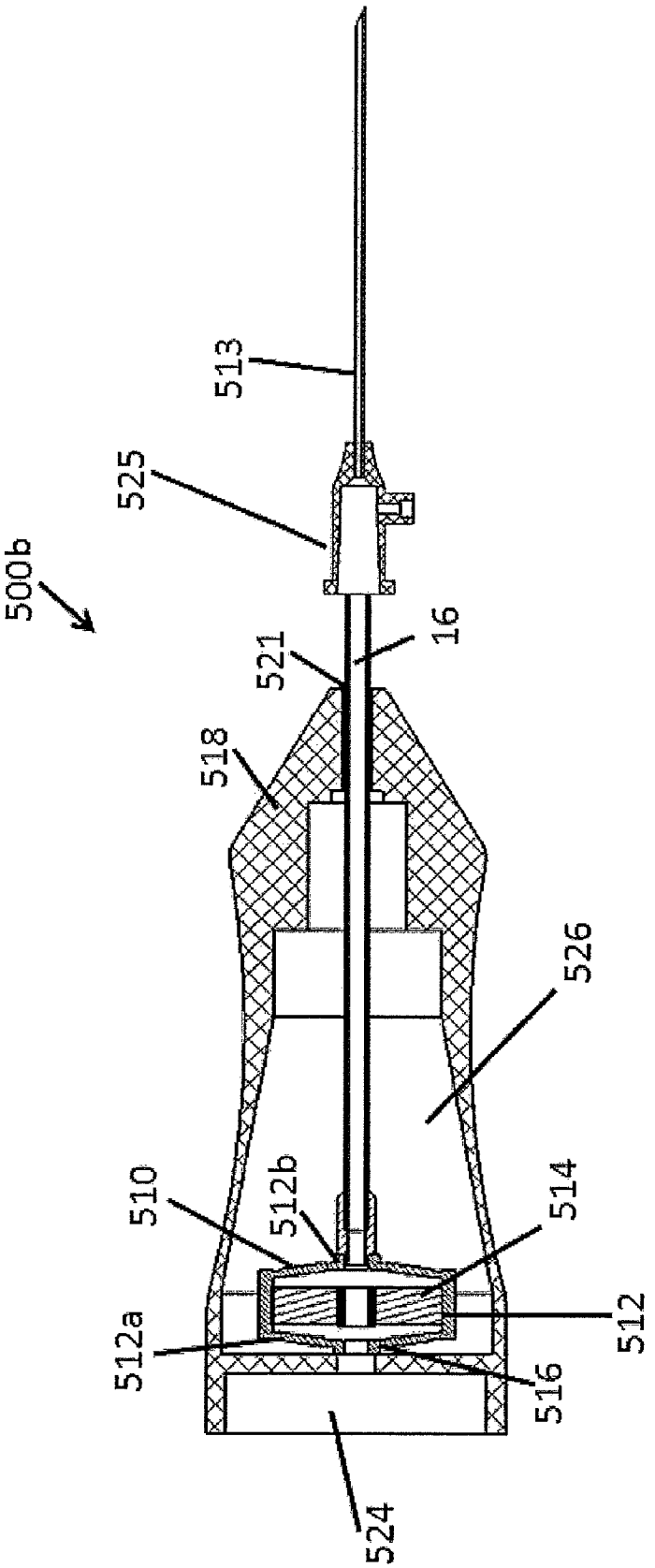

Fig. 14a

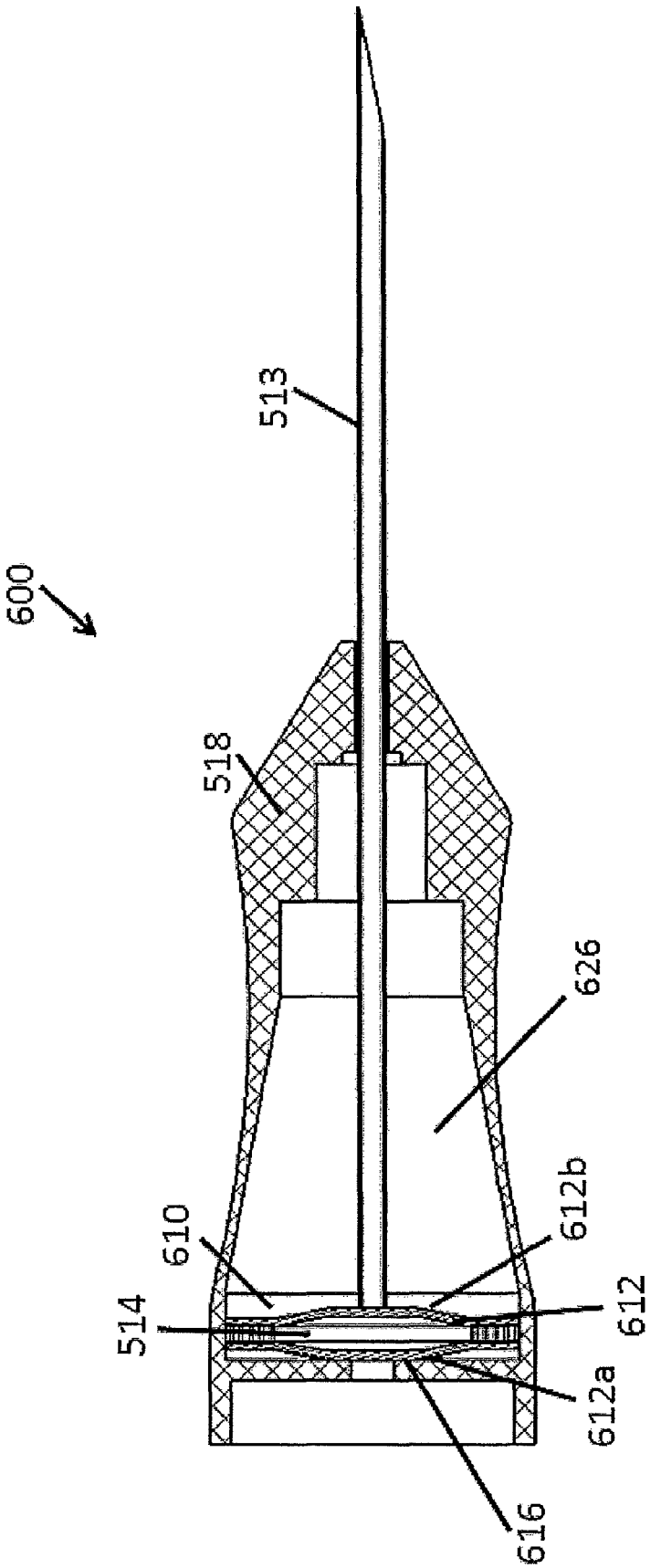

Fig. 15

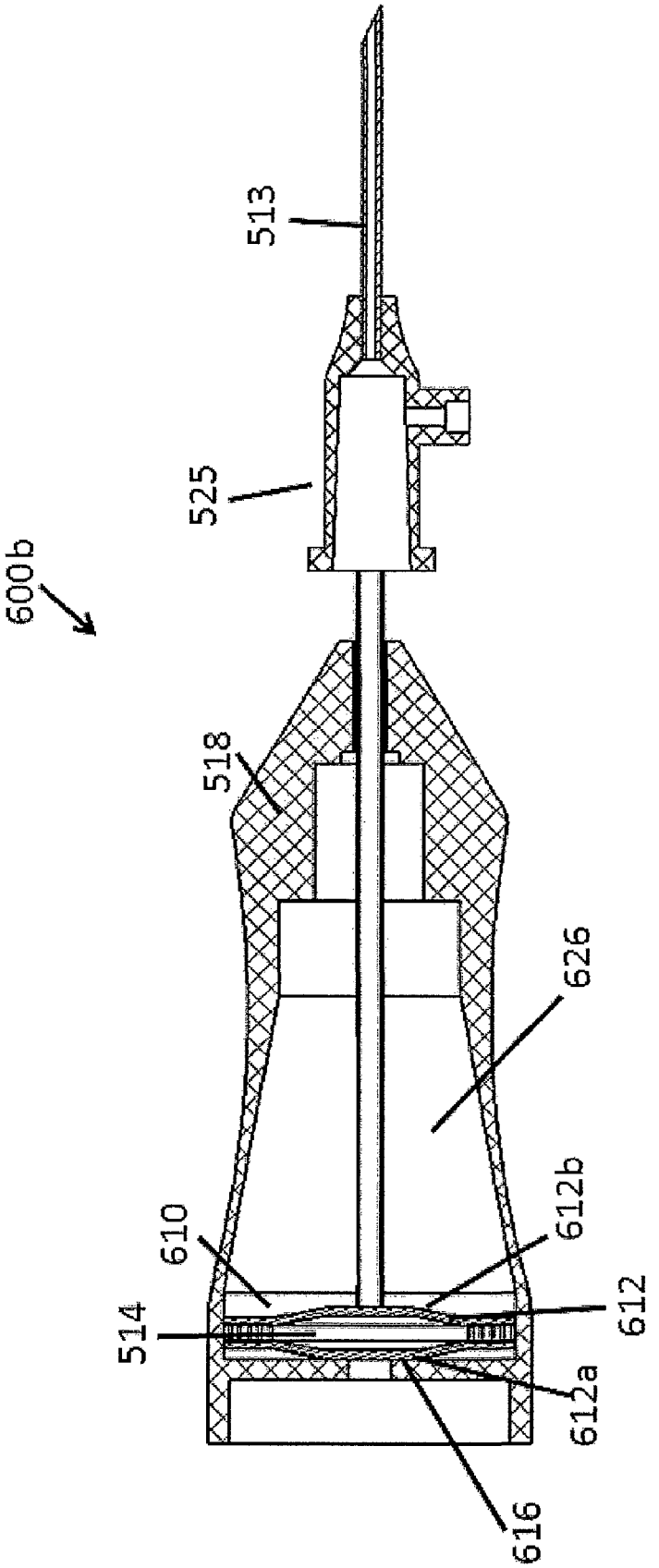

Fig. 16

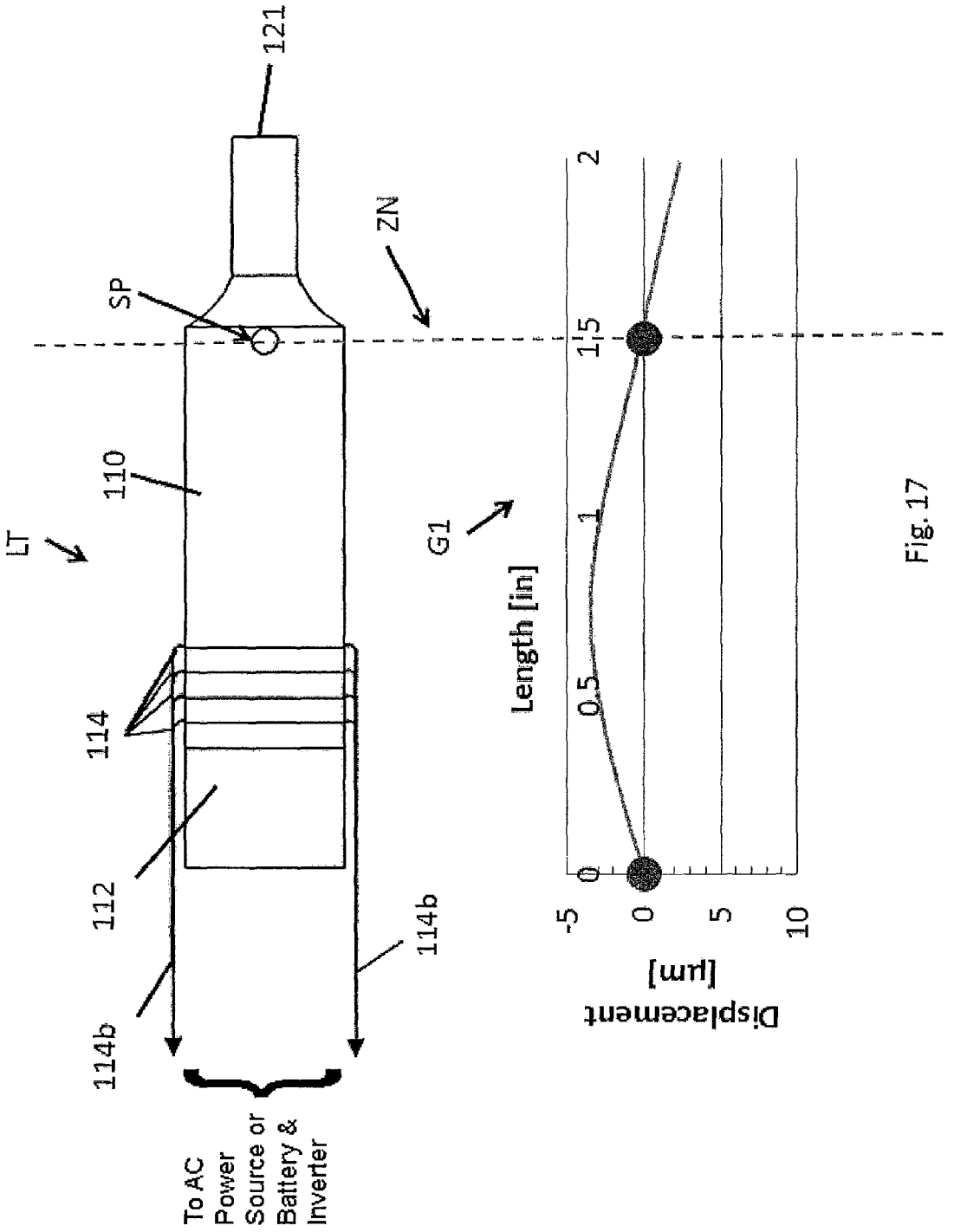
121
ZN
SP
110
LT
G1
114
112
114b
114b
To AC Power Source or Battery & Inverter
Length [in]
0
0.5
1
1.5
2
Displacement [μm]
-5
0
5
10

Fig. 17

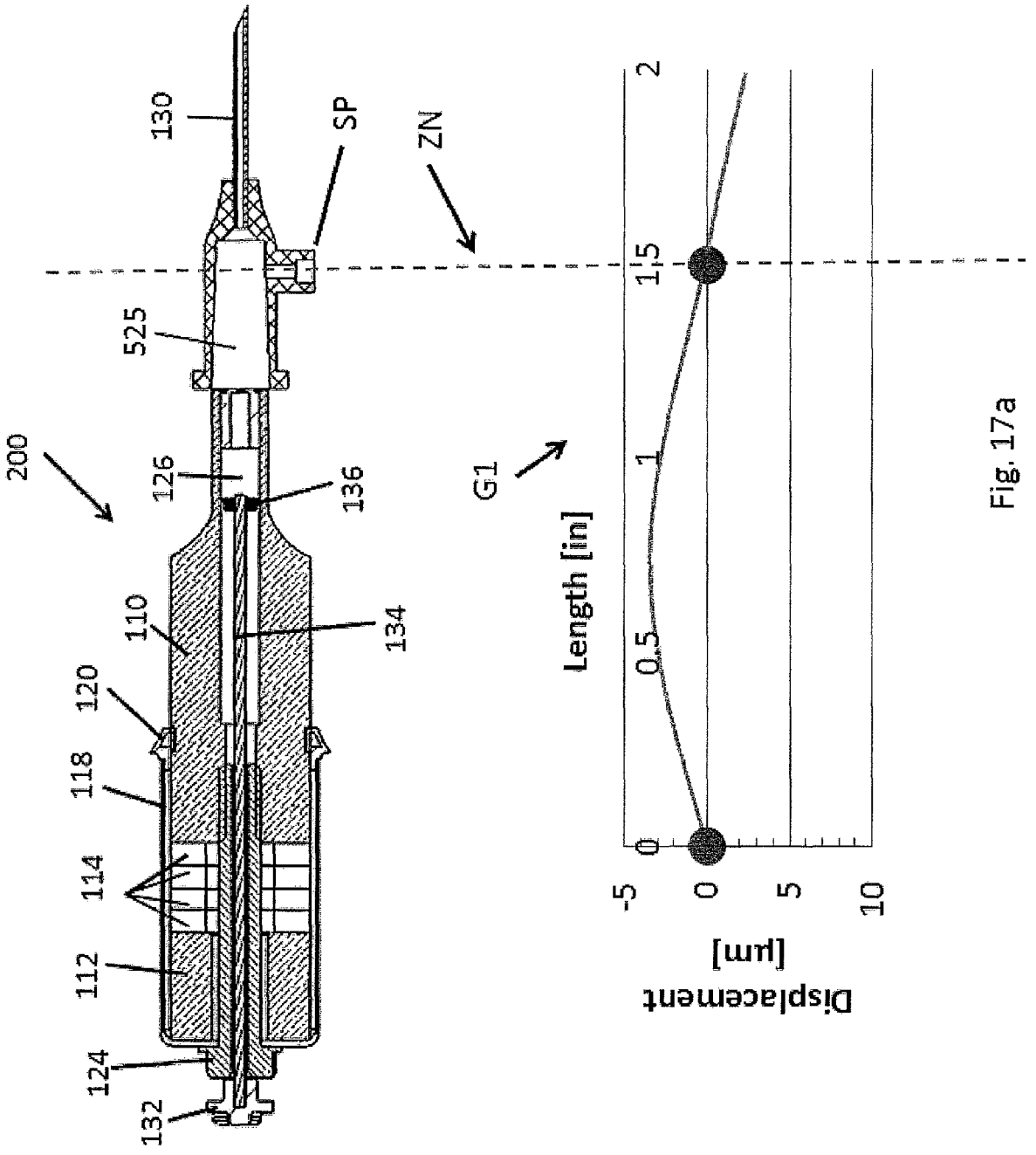
130
SP
ZN
525
200
126
136
G1
110
134
120
118
114
112
124
132
Length [in]
0
0.5
1
1.5
2
-5
0
5
10
Displacement
[µm]

Fig. 17a

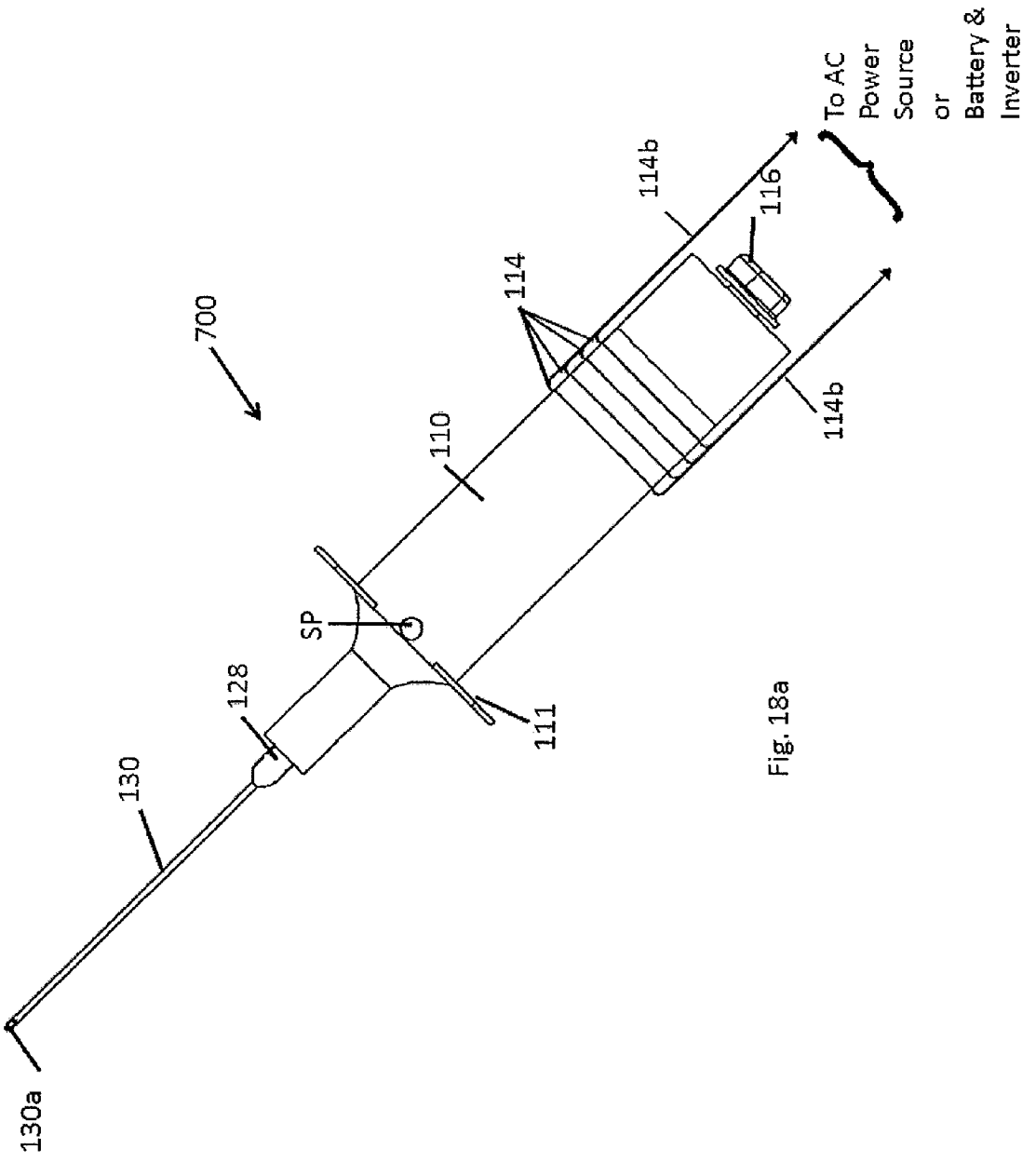
700
130a
130
128
SP
111
110
114
114b
116
114b
To AC
Power
Source
or
Battery &
Inverter

Fig. 18a

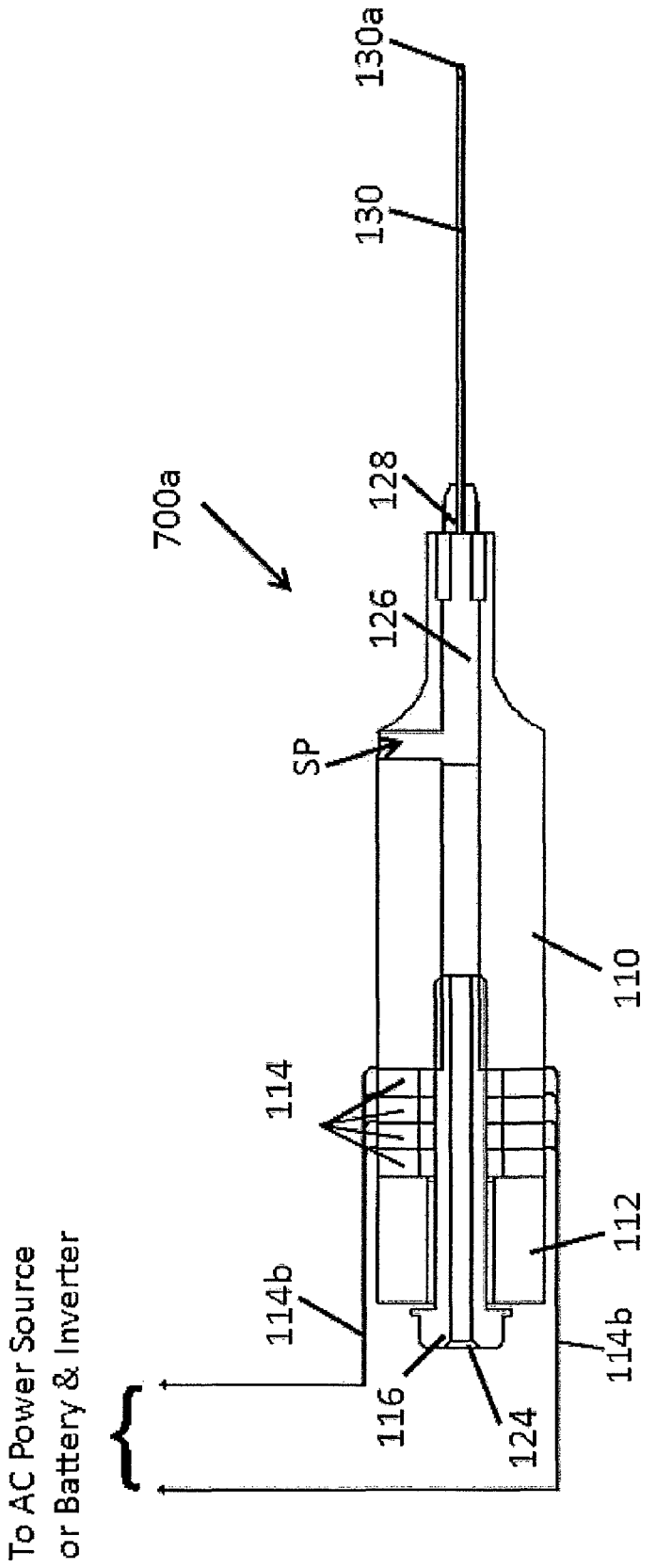
130a
130
128
700a
126
SP
110
114
112
114b
116
124
114b
To AC Power Source
or Battery & Inverter

Fig. 18b

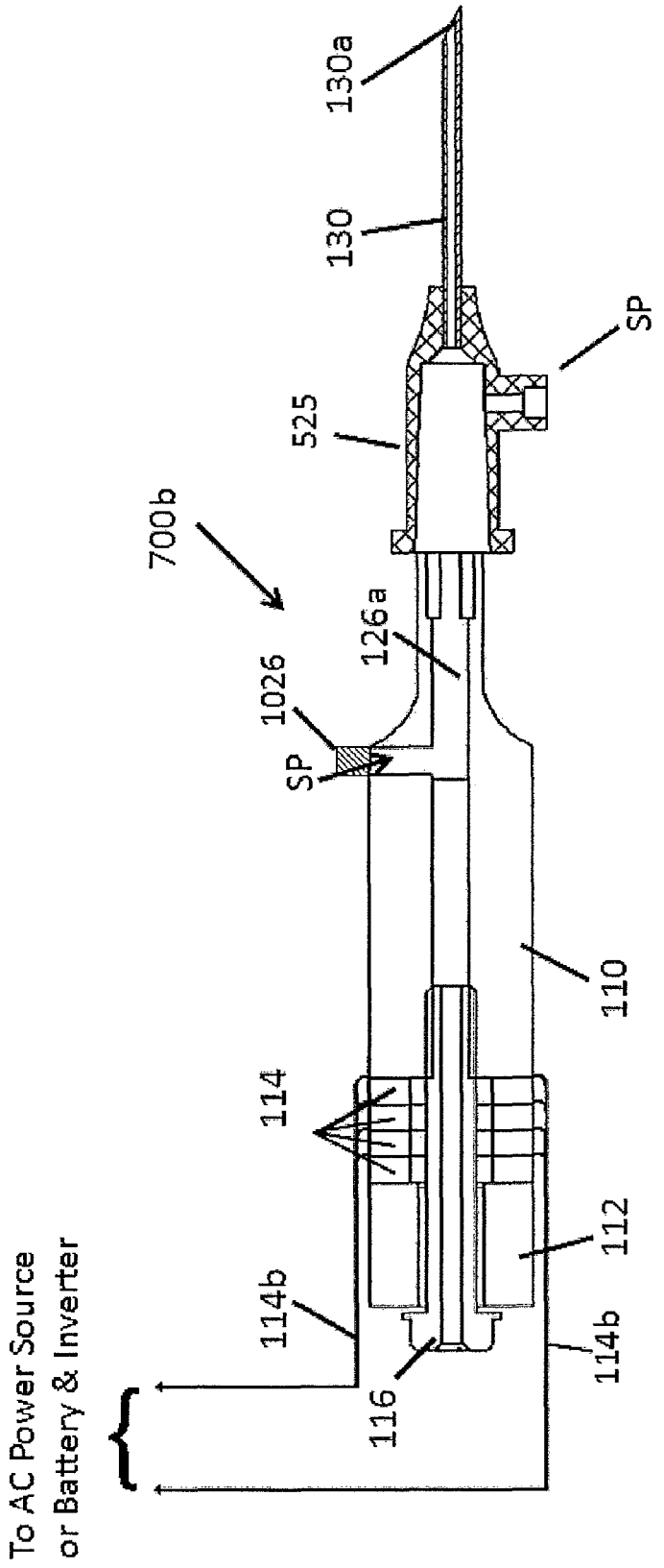
130a
130
SP
525
700b
126a
1026
SP
110
114
112
114b
114b
116
To AC Power Source
or Battery & Inverter

Fig. 18c

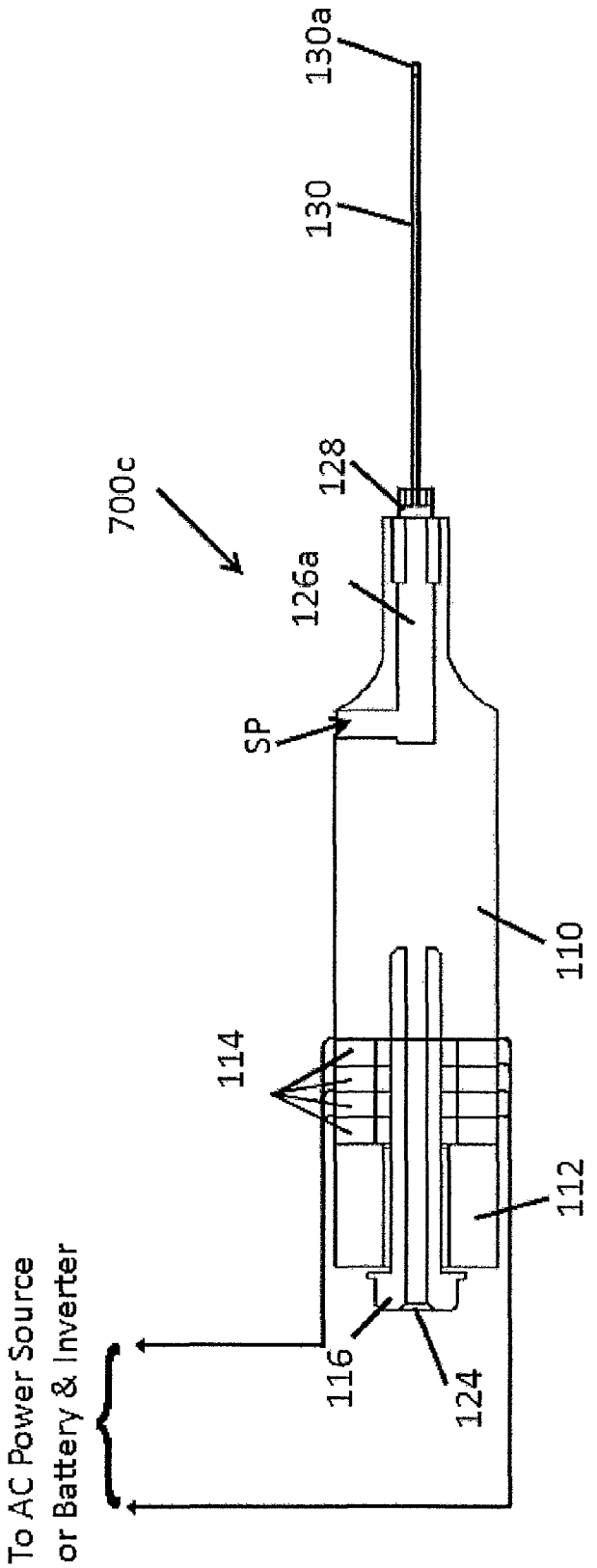
130a
130
128
700c
126a
SP
110
114
112
116
124
To AC Power Source
or Battery & Inverter

Fig. 18d

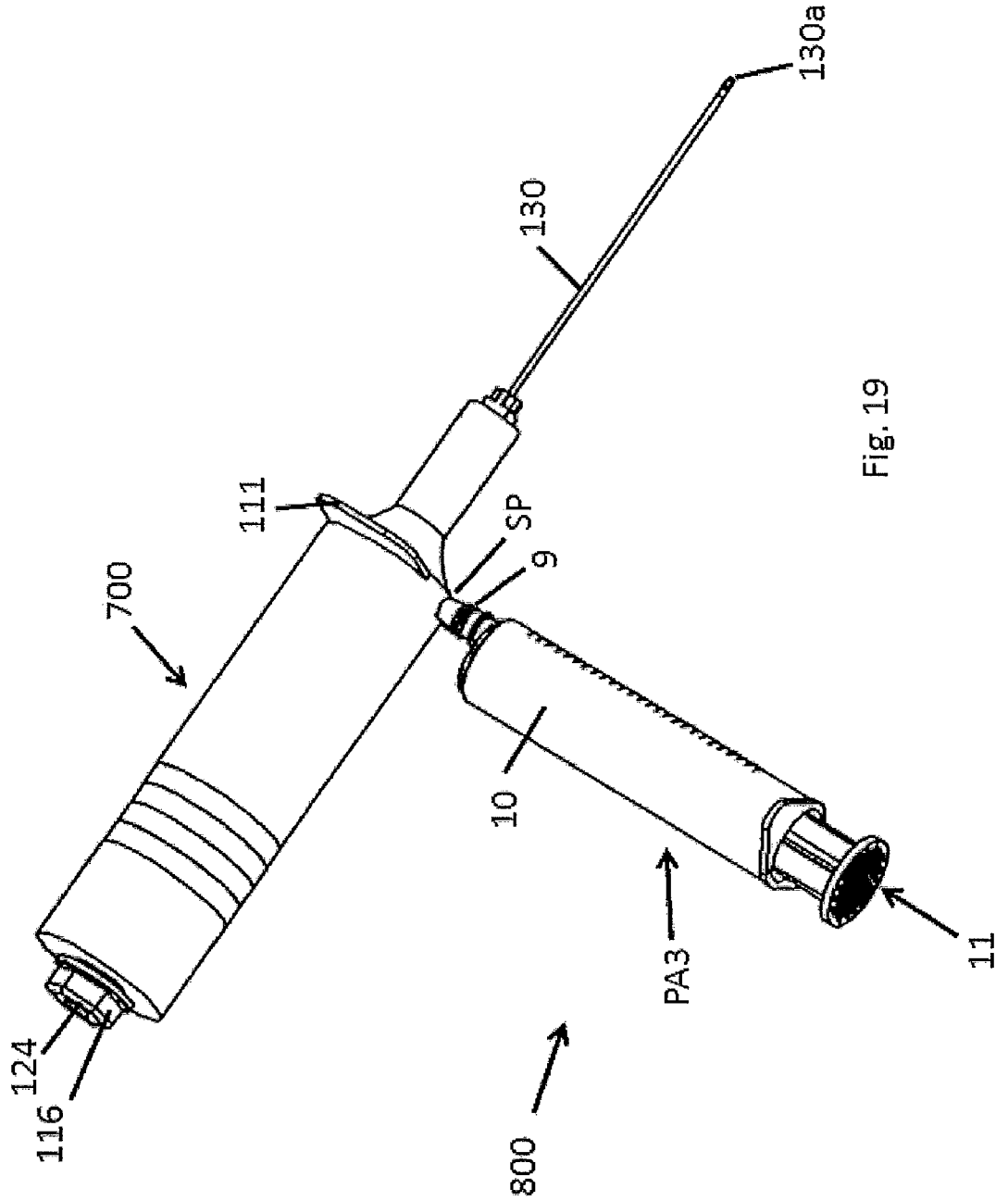

Fig. 19

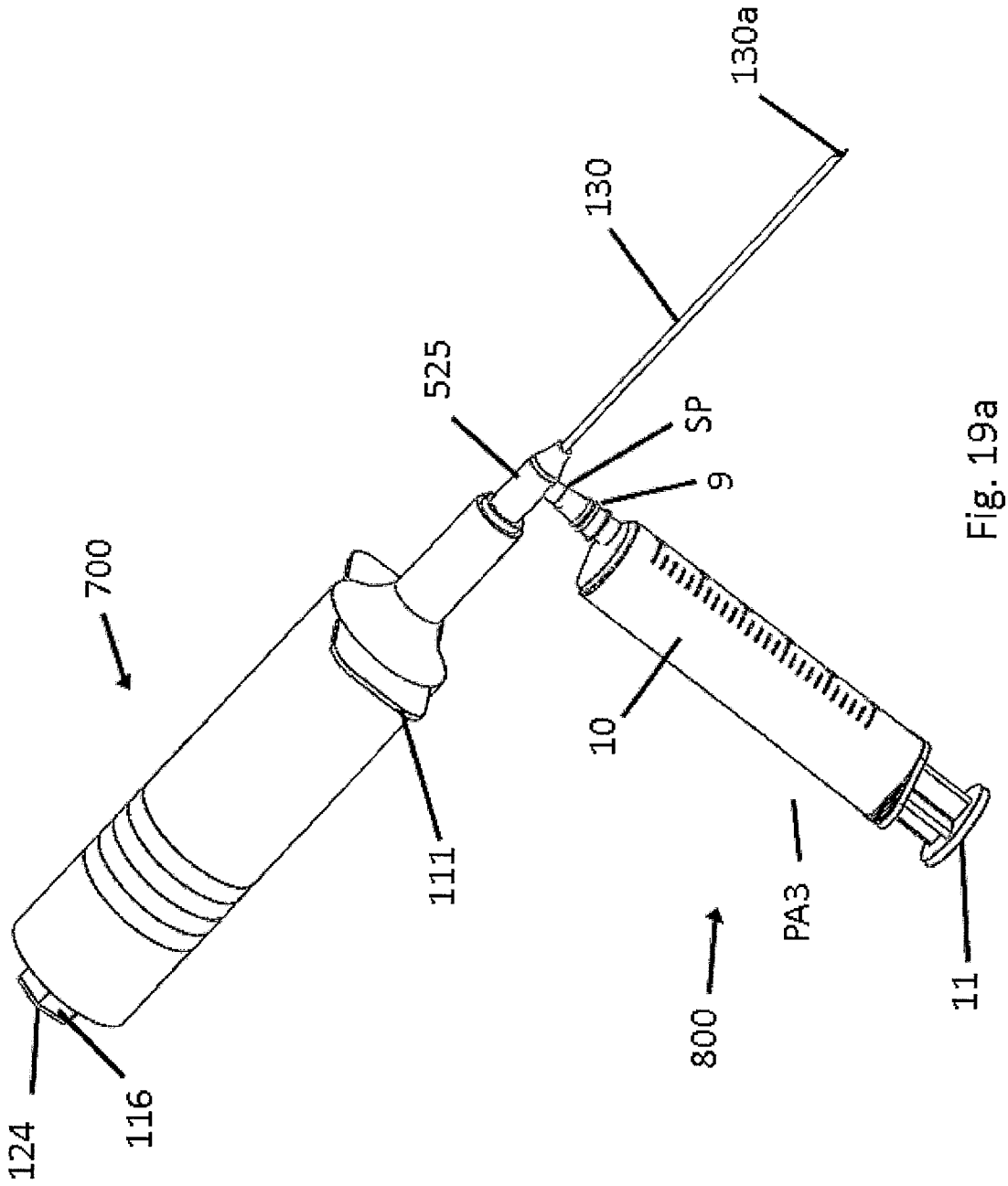

Fig. 19a

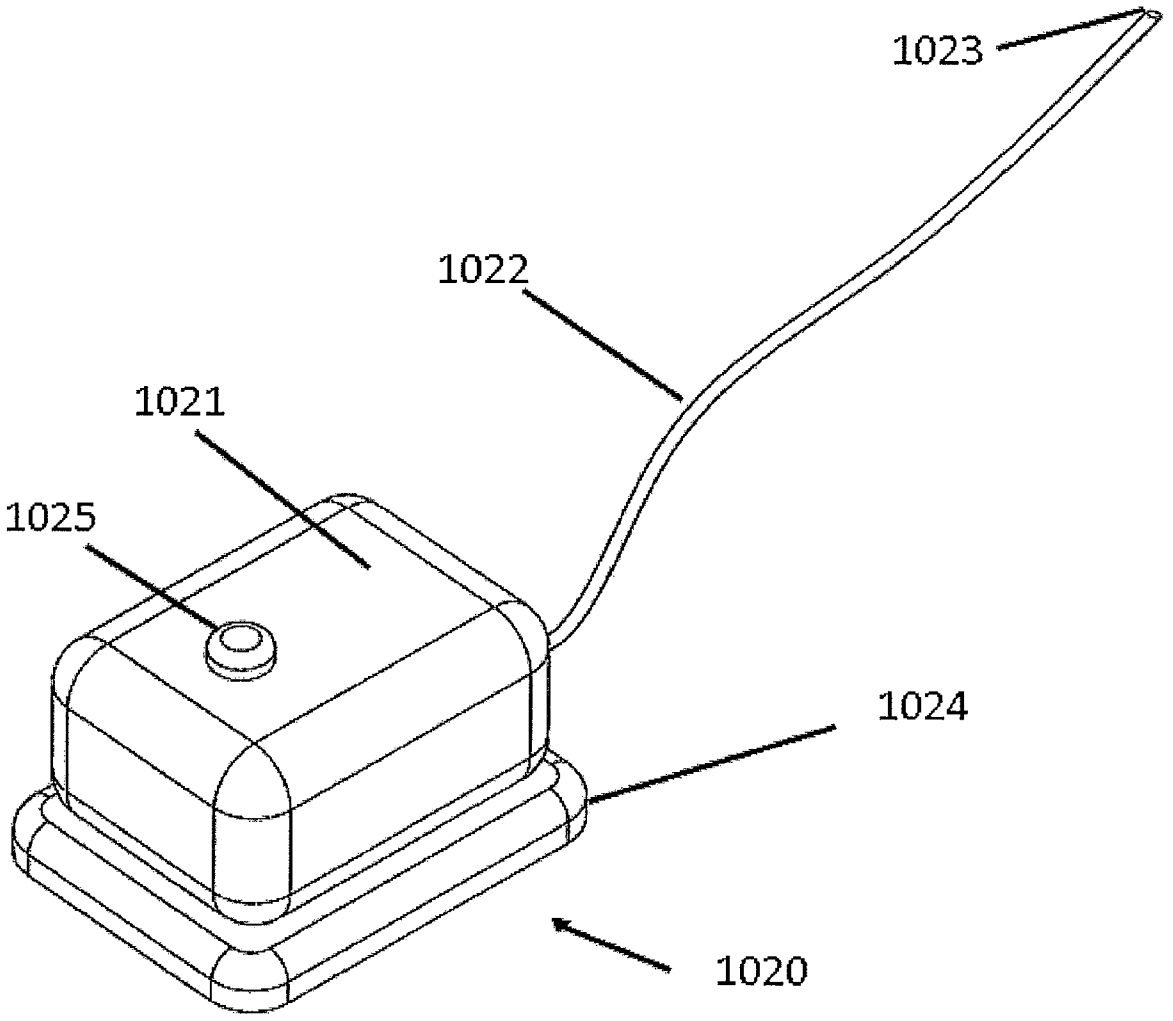

Fig. 19b

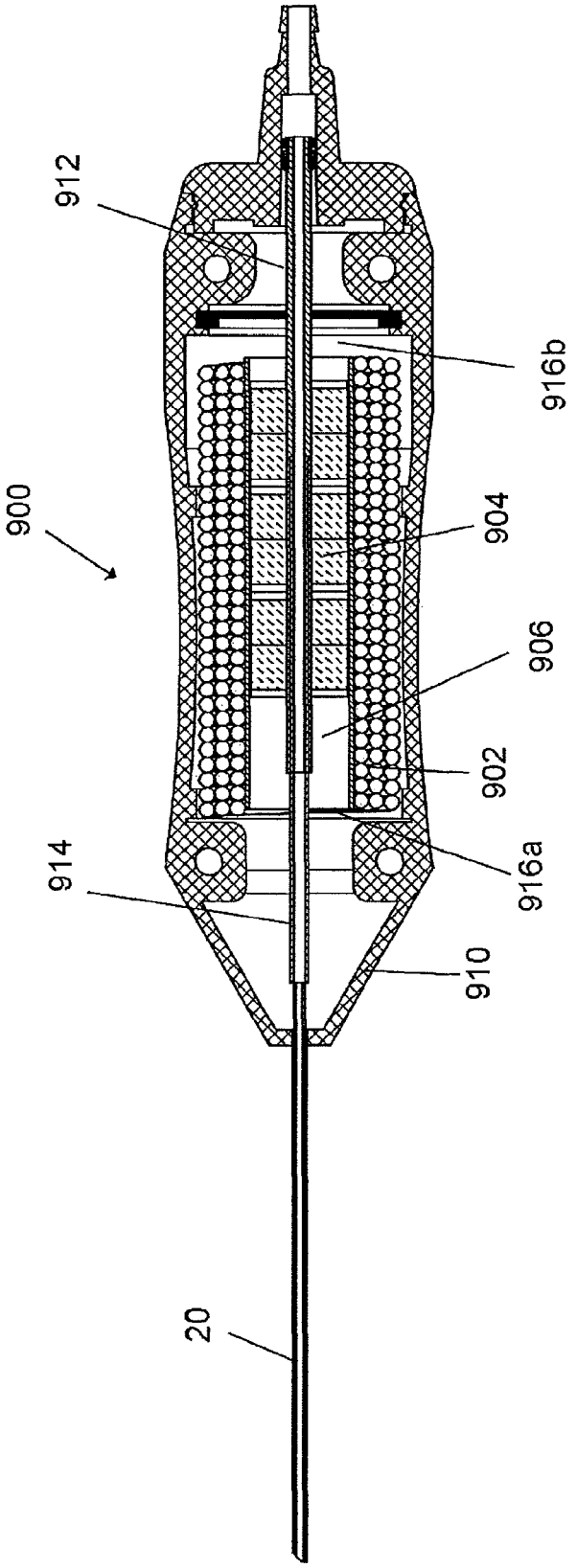

Fig. 20a

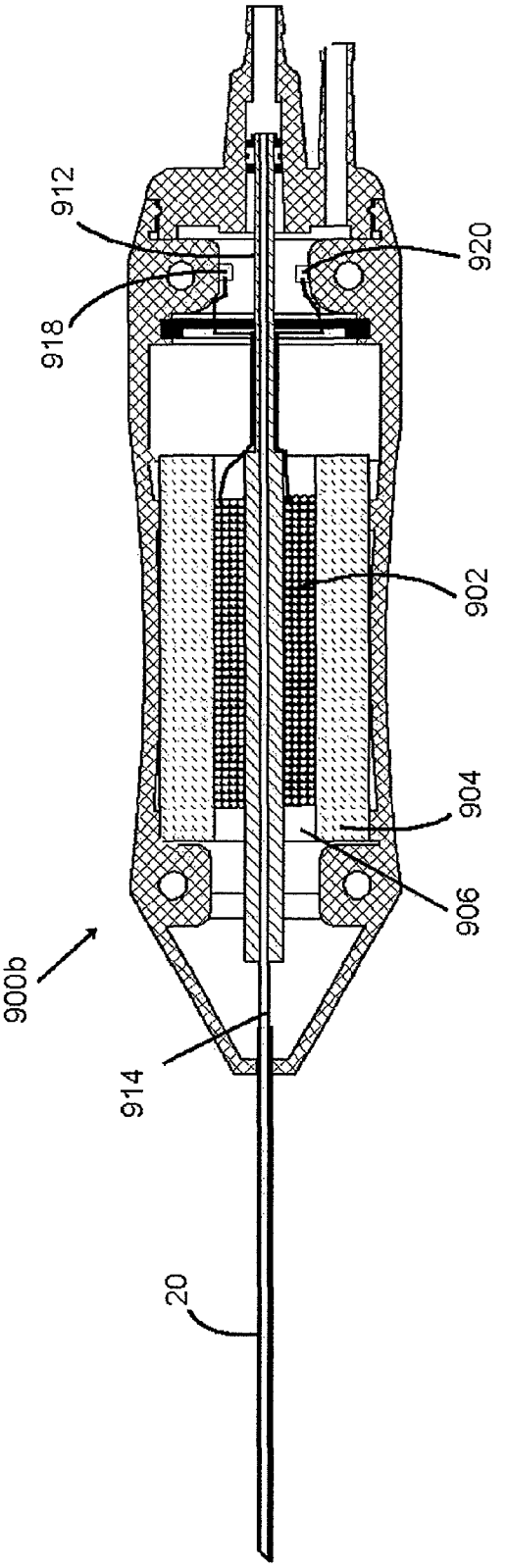

Fig. 20b

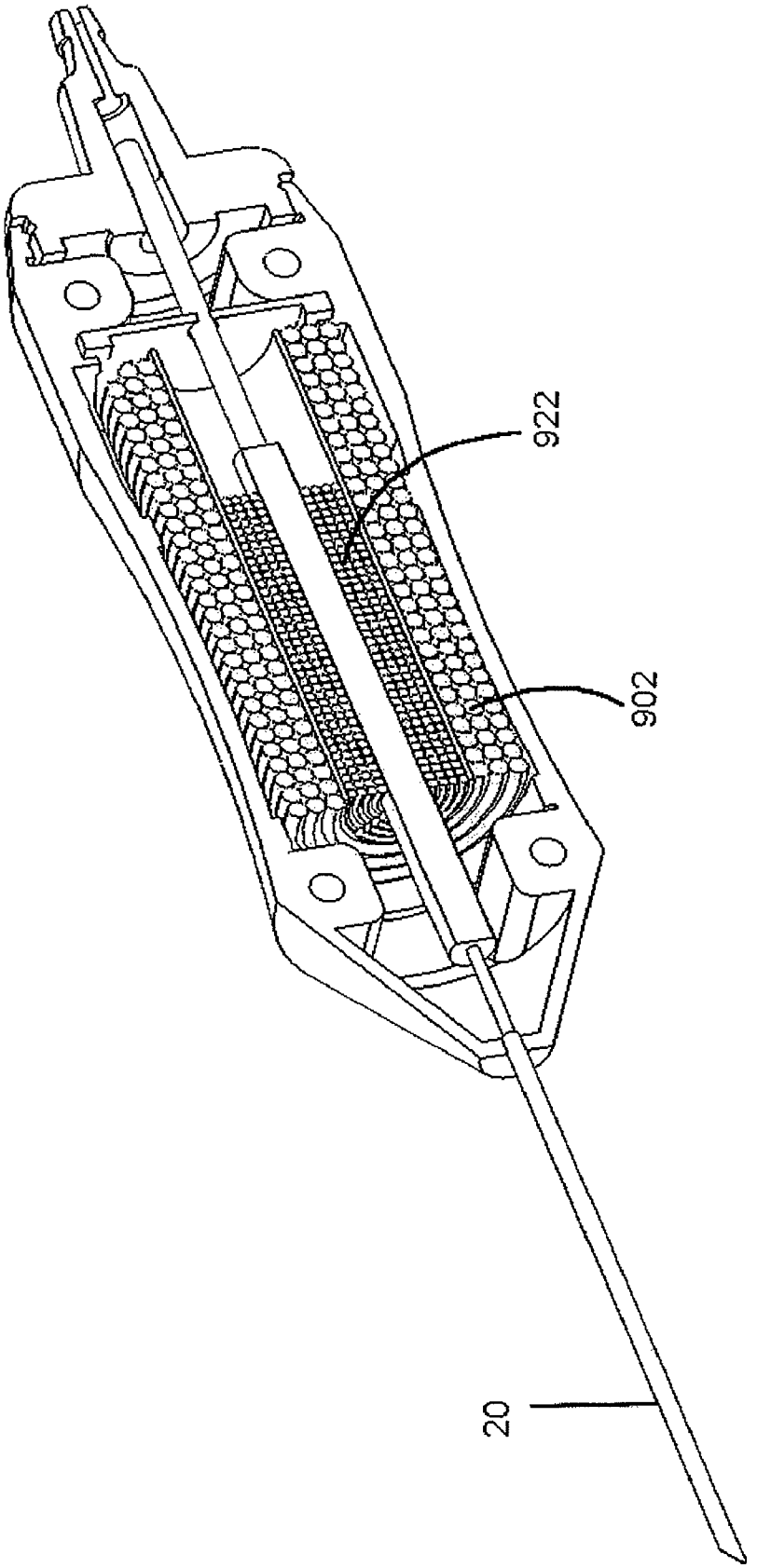

Fig. 20c

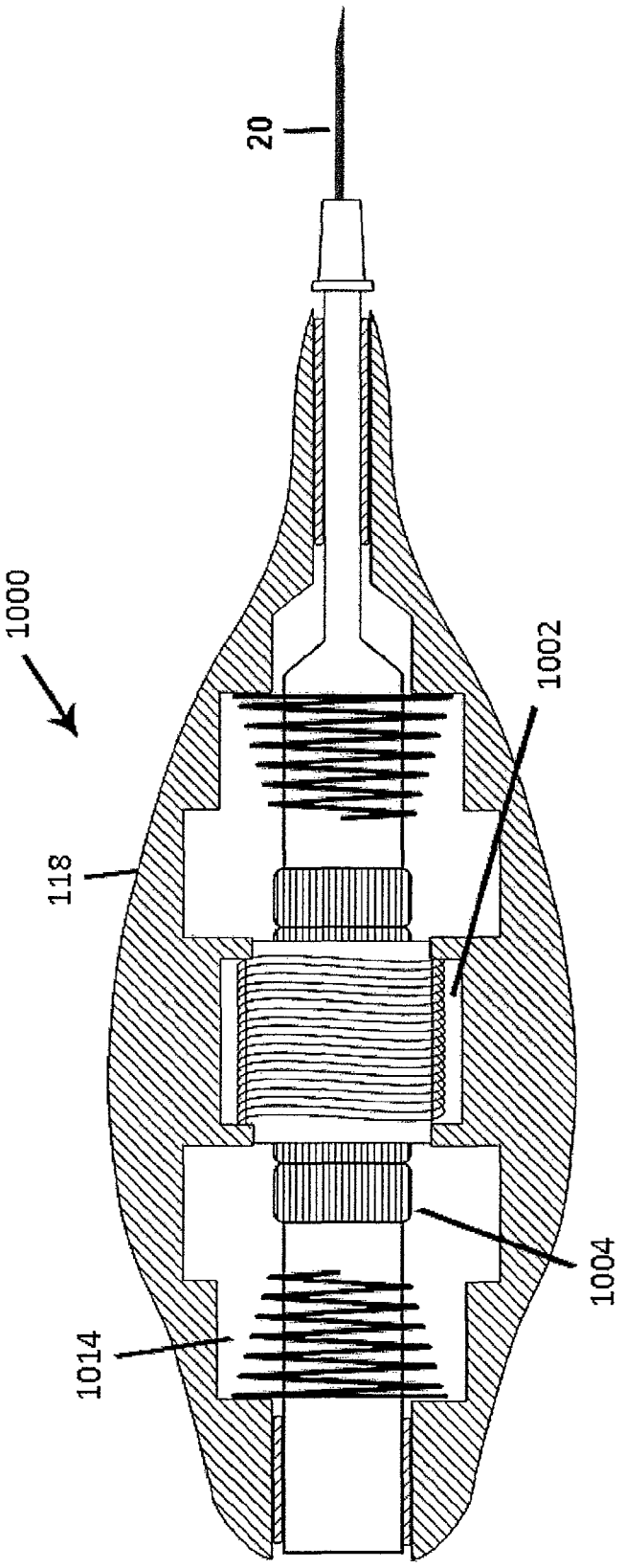

Fig. 20d

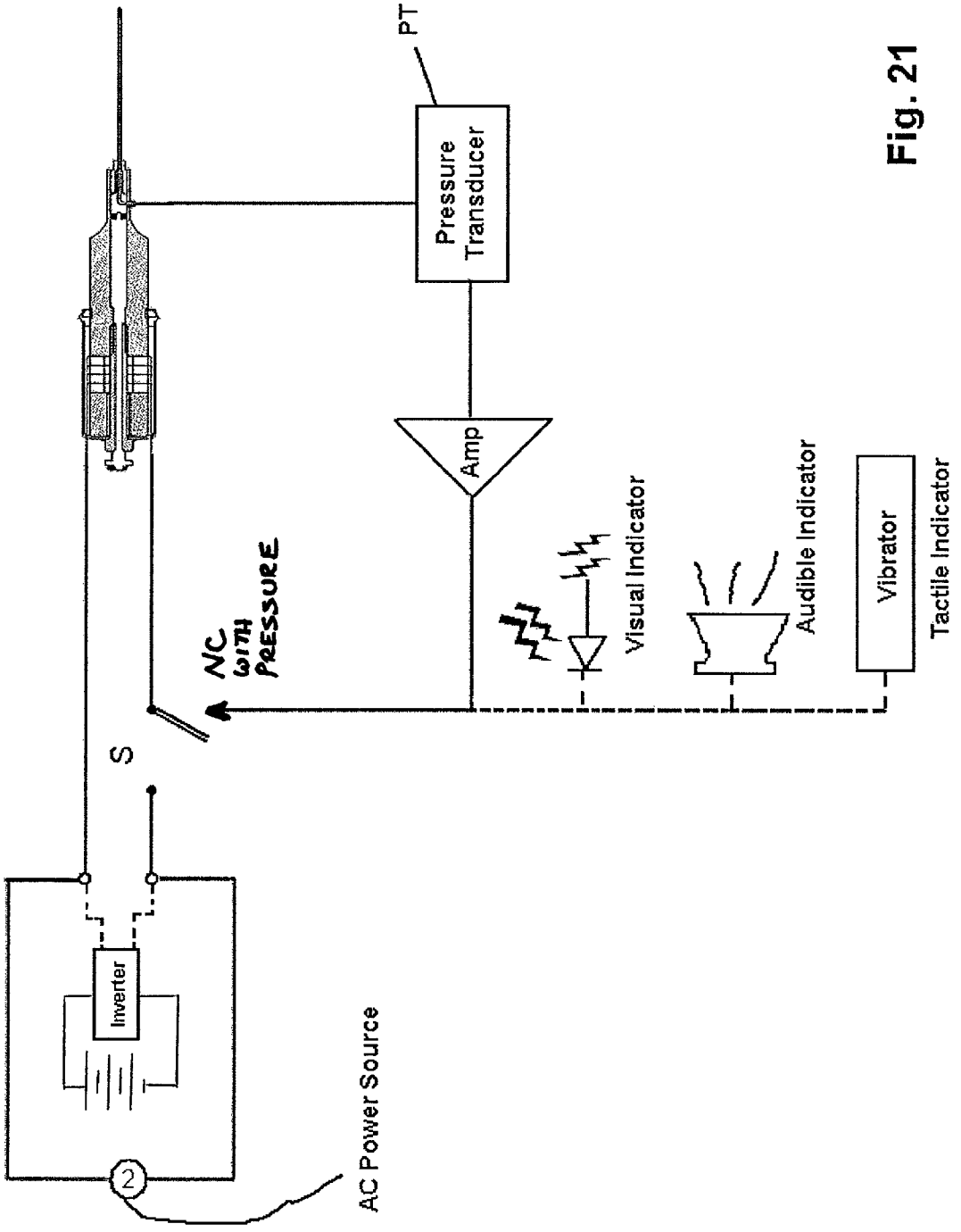
PT
Pressure Transducer
Amp
NC WITH PRESSURE
S
Visual Indicator
Audible Indicator
Vibrator
Tactile Indicator
Inverter
AC Power Source
2

Fig. 21

MEDICAL TOOL FOR REDUCED PENETRATION FORCE WITH FEEDBACK MEANS

CROSS-REFERENCE TO RELATED APPLICATIONS

This non-provisional Application claims the benefit under 35 U.S.C. §119(e) of Provisional Application Ser. No. 61/089,756 filed on Sep. 15, 2008 entitled MEDICAL TOOL FOR REDUCED PENETRATION FORCE WITH FEEDBACK MEANS and also is a Continuation-in-Part application and claims the benefit under 35 U.S.C. §120 of application Ser. No. 12/163,071 filed on Jun. 27, 2008 entitled MEDICAL TOOL FOR REDUCED PENETRATION FORCE which in turn claims the benefit under 35 U.S.C. §119(e) of Provisional Application Ser. No. 60/937,749 filed on Jun. 29, 2007 entitled RESONANCE DRIVEN VASCULAR ENTRY NEEDLE and all of whose entire disclosures are incorporated by reference herein.

STATEMENT REGARDING FEDERALLY SPONSORED RESEARCH OR DEVELOPMENT

This invention was made with government support under contract numbers 1R43GM085844-01, 1R43RR02493-01A2, and 1R43CA139774-01A1 awarded by the National Institutes of Health. The government has certain rights in the invention.

BACKGROUND OF THE INVENTION

1. Field of the Invention

The present invention generally pertains to handheld medical devices, and more specifically to electrically driven lancets; epidural catheter inserters; biopsy medical instruments, such as bone biopsy medical devices; vascular entry penetrating members, spinal access needles and other catheterization needles. The invention is applicable to the delivery and removal of blood, tissues, medicine, bone marrow, nutrients or other materials within the body.

2. Description of Related Art

Epidural anesthesia is a form of regional anesthesia involving injection of drugs directly into the epidural space. To begin the procedure, a needle is inserted from the outer layer of skin, through several layers of tissue and finally placed within the epidural space, through which a catheter is optionally passed. Local anesthetics are injected into the epidural space causing temporary loss of sensation and pain by blocking the transmission of pain signals through nerves in or near the spinal cord. The procedure can be unpleasant to the patient because of the high force levels required for the relatively dull epidural needle to penetrate the supraspinous ligament, interspinous ligament and ligamentum flavum. One complication is that a clinician will accidently overshoot and puncture the dura because of this high force of penetration and an almost-instantaneous change in resistance upon passing the needle into the epidural space (i.e., high forward momentum followed by instantaneous minimization of force). Upon puncturing the dura, the cerebrospinal fluid can leak into the epidural space causing the patient to experience severe post dural puncture headache, lasting from days to possibly years. Significant leakage can cause enough intracranial hypotension as to tear veins, cause subdural hematoma, and traction injuries to the cranial nerves resulting in tinnitus, hearing loss, dizziness, facial droop, or double vision.

A bone marrow biopsy is used for diagnosing tumors and a variety of bone diseases. The most commonly used site for the bone biopsy is the anterior iliac crest. A major disadvantage is the force required to penetrate the bone tissue, and the twisting motion often used to force the needle inward, which results in patient discomfort as well as possible healing complications from damaged tissues. The penetration force can also be tiring for clinicians and lead to multiple sampling attempts. Complications are rare but can include bleeding, pain, and infection. Pain is minimized with proper local anesthesia, though the patient still experiences a pressure sensation during insertion and retraction during some procedures. Another problem is crushing the sample or being unable to retrieve part of all of it, limiting the ability to diagnose. As shown in FIG. **1**, a biopsy tool PA**1** typically comprises a handle (not shown) and hollow cannula **1** with cannula distal end **1'** surrounding a stylet **2** attached to the handle. To penetrate through cortical bone, a clinician pushes the cannula and stylet through the bone to the marrow. The distal tip **3** of the inner stylet or trocar is sharpened and has an angled chisel-like face **4** which reduces the surface area to reduce the exertion force.

Currently, to minimize the possibility of a dura puncture, the epidural catheter insertion process is typically performed very slowly and with a 16-18 gauge, specially designed, relatively dull needle PA**2**, such as the one shown in FIG. **2** called a Tuohy needle **5**. An epidural needle, such as the Tuohy needle **5** or Hustead needle, has a directional curved tip **6**, which decreases the "sharpness" at the needle and, therefore, makes accidental dura puncture more difficult. The curved tip also facilitates directing an indwelling catheter into the epidural space and a tip opening **7** facilitates catheter or fluid introduction or removal. Unfortunately, this dull curved-tip design actually increases the force a clinician must use and makes it more difficult for a clinician to stop the forward momentum upon penetration of the dural space. Additionally, the Tuohy design increases the likelihood that a clinician relies on tactile feedback during penetration. In other words, during the insertion procedure a clinician will rely on feeling a "popping" sensation—indicative of passing the needle past the ligamentum flavum—to locate the tip of the needle within the epidural space and quickly stop the forward momentum being applied. Still, because penetration into other tissues, such as muscle, calcified ligament, or regular ligament may produce a similar popping, a clinician may not fully perceive the correct location of the needle tip where the tip of the needle is occluded until passing through these tissues.

Several alternate technologies have been developed that attempt to minimize the dura puncture risk, while also giving the clinician indication of successful epidural placement. For example, the detection method and apparatus disclosed in U.S. Patent Application Publication No. 2007/0142766 (Sundar, et al.), the contents of which are incorporated by reference, relies on a spring-loaded plunger pushing a fluid into the epidural space upon successful entry. Accordingly, the clinician is given a visual indicator (i.e., the movement of the plunger as the fluid experiences a loss of resistance at the needle opening), and would cease applying forward force. Similarly, U.S. Pat. No. 5,681,283 (Brownfield) also relies on a visual indicator to communicate successful entry of a needle into a cavity to the clinician. Unfortunately, while a visual indicator is a positive advancement, the actual cause of the accidental dural wall puncture—that is, the high force applied by the clinician against the needle to pass through the various tissue layers and then stop—is not taught or suggested.

Therefore, there exists a need for a tool that reduces the puncture force of a needle, such as a Tuohy needle, and

enables a clinician to perform a more controlled entry into the epidural space, thereby reducing the possibility of an accidental dura puncture.

While accidental dura puncture is a concern, simply locating the epidural space may pose a challenge even to the most skilled physicians. Therefore, when a needle such as a Tuohy needle is passed through the ligamentum flavum and into the epidural space, it is helpful for a clinician to receive immediate feedback indicating successful penetration and the location of the tip of the needle. A basic conventional feedback device such as the one in FIG. **2***a* comprises a needle (not shown) attached to a syringe PA**3** at a front portion **9**, and wherein the syringe PA**3** is formed of a tubular body **10** and houses a biasing element **11** comprising a stem acting as a biasing element. To provide feedback indicating successful epidural penetration the device relies on a biasing force acting against the biasing element **11** which then acts upon a fluid, such as saline or air within the syringe. Essentially, in this hydraulic feedback method, as the biasing force acts upon the fluid, the fluid translates this pressure to an opening of the needle tip. An opposing force, acting on the needle tip as it is held against a tissue such as the ligamentum flavum, acts to prevent the fluid from being released from the syringe. Typically, a clinician's thumbs act as the biasing force source which in turn acts upon the plunger stem. The clinician's thumbs serve to "feel" the hydraulic resistance exerted on the fluid by the opposing tissue force. Upon entering the epidural space, however, the opposing pressure of tissue acting against the tip is removed, and a pressure drop allows the biasing force to move solution out of the syringe through the needle tip. The clinician becomes aware of successful penetration of the epidural space due to his/her thumbs "feeling" the sudden pressure drop or loss of resistance at the plunger stem. Also, the clinician may receive visual indication of successful penetration by witnessing the plunger advancing through the syringe externally as the fluid is released into the epidural space in the patient. One problem with this conventional device and method is that it is difficult for a clinician to both apply a biasing force on the plunger while also applying an advancing force against the syringe body in order to advance the needle through the ligamentum flavum. Moreover, to prevent accidental dura puncture, clinicians tend to hold the conventional syringe in such a way as to hold the patient steady, while applying a forward momentum against the syringe, and while applying a biasing force against the plunger stem. This is both awkward and uncomfortable to the clinician and patient.

Some advancements have also attempted to provide an automatic biasing element to act against the plunger of an epidural syringe while also providing visual indication or feedback, rather than tactile response, of successful puncture of various internal target areas in the human body. For example, in U.S. Patent Publication No. 2007/0142766 (Sundar et al.), a spring is utilized to act with a biasing force against the syringe plunger. When the epidural needle attached to the syringe passes through into the dural space, the pressure drop allows the spring to bias the plunger. As the plunger moves, the stem provides at least some visual indication as it moves with the plunger. Similarly, U.S. Pat. No. 5,024,662 (Menes et al.), which is hereby incorporated by reference, provides visual indication by utilizing an elastomer band to provide the biasing force against the plunger stem. In U.S. Pat. No. 4,623,335 (Jackson) which is hereby incorporated by reference, an alternative device assists in visually indicating a pressure to identify the location of the needle tip. In addition, U.S. Pat. No. 7,297,131 (Call) which is hereby incorporated by reference, uses a pressure transducer to translate a pressure change into an electronic signal. The electronic signal is then converted to a visual display indicator, for example by activating a light emitting diode to emit.

Therefore, a need exists to overcome the challenges not addressed by conventionally available technologies that reduces the force necessary for penetration of a sharp medical element of a medical device through tissue and also has the ability to deliver (e.g., deliver saline solution, or drugs, etc.) or retrieve materials subcutaneously (e.g., bone biopsy, etc.).

A need also exists to provide visual, tactile, electrical or additional indication to a clinician that the penetrating member has successfully penetrated the specific body space such as the epidural space, especially when the force to enter such a space has been substantially reduced. And this same force reduction must be either controlled or shut off immediately upon entry into the epidural space to avoid (easier) penetration of the dura.

Specifically, a need exists in the medical device art for an improved medical device having a penetrating element that is vibrated at a frequency that thereby reduces the force required to penetrate tissue, reduces the amount of resulting tissue damage and scarring, improving body space or vessel access success rate, minimizes introduction wound site trauma and, most importantly, improves patient comfort while minimizing potential complications.

A need exists for a clinician to be able to use less force to penetrate hard tissue such as the cortical bone during bone biopsy, which would reduce clinician fatigue, patient discomfort, and tissue damage while improving the sampling success rate and quality. There is a need to sense proper location, stop forward motion and collect the sample. There is a further need to turn device on after collection and to reduce force and patient discomfort as the penetrating member is being retracted from the body.

There is also a need for spinal access procedures where a clinician would want a reduction of force as well as to know the location of the needle tip but applied to a relatively-sharp penetrating member, such as a pencil point tip, as the clinician does not want to core tissue.

There is also a need for performing nerve block procedures where a clinician would want a reduction of force as well as to know the location of the needle tip. And this same force reduction must be either controlled or shut off immediately upon entry into the desired location.

All references cited herein are incorporated herein by reference in their entireties.

SUMMARY OF THE INVENTION

The basis of the invention is a handheld medical device, (e.g., epidural needle, bone biopsy device, spinal needle, regional block needle, catheter introducer needle, etc.) having a penetrating member (e.g., an introducer needle, Tuohy needle, pencil point tipped needle, trocar needle (e.g., JAMSHIDI® biopsy needle), etc.), at a distal end, for use in procedures, (e.g., vascular entry and catheterization, single shot or continuous epidurals, spinal access, regional blocks, or bone biopsy, etc.), wherein the medical device comprises at least one driving actuator, (e.g., a piezoelectric, voice coil, solenoid, pneumatic, fluidic or any oscillatory or translational actuator etc.) attached to the penetrating member (e.g., at a proximal end of the penetrating member), and wherein the driving actuator translates the penetrating member, causing it to reciprocate at small displacements, thereby reducing the force required to penetrate through tissues.

Additionally, the invention comprises a means for providing feedback, either visually, audibly, or by tactile response,

using a variety of detection mechanisms (such as, but not limited to, electrical, magnetic, pressure, capacitive, inductive, etc. means), to indicate successful penetration of various tissues, or of voids within the body such as the epidural space so that the clinician knows when to stop as well as to limit power to the driving mechanism.

Actuator technologies that rely on conventional, single or stacked piezoelectric material assemblies for actuation are hindered by the maximum strain limit of the piezoelectric materials themselves. Because the maximum strain limit of conventional piezoelectric materials is about 0.1% for polycrystalline piezoelectric materials, such as lead zirconate titanate (PZT) polycrystalline (also referred to as ceramic) materials and 0.5% for single crystal piezoelectric materials, it would require a large stack of cells to approach useful displacement or actuation of, for example, a handheld medical device usable for processes penetrating through tissues. However, using a large stack of cells to actuate components of a handpiece would also require that the tool size be increased beyond usable biometric design for handheld instruments.

Flextensional actuator assembly designs have been developed which provide amplification in piezoelectric material stack strain displacement. The flextensional designs comprise a piezoelectric material driving cell disposed within a frame, platen, endcaps or housing. The geometry of the frame, platten, endcaps or housing provides amplification of the axial or longitudinal motions of the driver cell to obtain a larger displacement of the flextensional assembly in a particular direction. Essentially, the flextensional actuator assembly more efficiently converts strain in one direction into movement (or force) in a second direction. Flextensional piezoelectric actuators may be considered mid-frequency actuators, e.g., 25-35 kHz. Flextensional actuators may take on several embodiments. For example, in one embodiment, flextensional actuators are of the Cymbal type, as described in U.S. Pat. No. 5,729,077 (Newnham), which is hereby incorporated by reference.

In another embodiment, flextensional actuators are of the amplified piezoelectric actuator ("APA") type as described in U.S. Pat. No. 6,465,936 (Knowles), which is hereby incorporated by reference. In yet another embodiment, the actuator is a Langevin or bolted dumbbell-type actuator, similar to, but not limited to that which is disclosed in U.S. Patent Application Publication No. 2007/0063618 A1 (Bromfield), which is hereby incorporated by reference.

In a preferred embodiment, the present invention comprises a handheld device including a body, a flextensional actuator disposed within said body and a penetrating or "sharps" member attached to one face of the flextensional actuator. In the broadest scope of the invention, the penetrating member may be hollow or solid. The actuator may have an internal bore running from a distal end to a proximal end or may have a side port located on the penetrating member attachment fitting. Therefore for single use penetrating members there is no need to sterilize the penetrating member after use. Where the penetrating member is hollow, it forms a hollow tubular structure having a sharpened distal end. The hollow central portion of the penetrating member is concentric to the internal bore of the actuator, together forming a continuous hollow cavity from a distal end of the actuator body to a proximal end of the penetrating member. For example, the flextensional actuator assembly may utilize flextensional Cymbal actuator technology or amplified piezoelectric actuator (APA) technology. The flextensional actuator assembly provides for improved amplification and improved performance, which are above that of a conventional handheld device. For example, the amplification may be improved by up to about 50-fold. Additionally, the flextensional actuator assembly enables handpiece configurations to have a more simplified design and a smaller format.

One embodiment of the present invention is a resonance driven vascular entry needle to reduce insertion force of the penetrating member and to reduce rolling or collapsing of vasculature.

An alternative embodiment of the present invention is a reduction of force epidural needle that provides the clinician a more controlled entry into the epidural space, minimizing the accidental puncturing of the dural sheath. In this embodiment, an actuator, for example, a Langevin actuator (more commonly referred to as a Langevin transducer), has a hollow penetrating member, for example a hollow needle, attached to a distal portion of the actuator. The Langevin actuator in this embodiment may be open at opposite ends. The openings include a hollow portion extending continuously from the distal end of the actuator to a proximal end of the actuator. The distal opening coincides with the hollow penetrating member. A plunger, having a handle, a shaft and a seal is also attached to the actuator at an opposite end of the sharps member. The plunger's shaft is slidably disposed within the continuous, hollowed inner portion of the actuator. The seal is attached to a distal portion of the plunger's shaft and separates a distal volume of the hollowed inner portion of the actuator from a proximal volume of the hollowed inner portion. Because the plunger's shaft is slidably disposed, the plunger is also slidably disposed and, in response to a motion of the shaft in a distal direction, reduces the distal volume of the hollowed inner portion and increases the proximal volume. Conversely, in response to a motion of the shaft in a proximal direction, the seal also moves in a proximal direction, thereby reducing the proximal volume of the hollowed portion and increasing the distal volume. The motion of the plunger's shaft, and, effectively, the plunger's seal, is actuated by an external force acting on the plunger's handle. When electrically activated, the actuator transfers compression and expansion of the piezoelectric material portion to a hollow and penetrating tip of the hollow needle. Langevin actuators may be considered high frequency actuators, e.g., >50 kHz. Another embodiment of the invention provides a bone marrow biopsy device having an outer casing, an actuator, for example, a Langevin actuator (e.g., see, for example, U.S. Pat. No. 6,491,708 (Madan, et al.), whose entire disclosure is incorporated by reference herein), including a first body portion and a second body portion of the actuator, with piezoelectric material formed between the first and second body portions, wherein the actuator is disposed at least partially within the casing. The invention further includes a handle, an outer cannula, such as a needle, having an open distal end and an open proximal end with the cannula positioned at a distal portion of the actuator. In one aspect of the present embodiment, the invention further comprises a stylet having a penetrating distal tip attached to the handle at a portion opposite the distal tip, wherein the stylet is slidably disposed through a center cavity of the body and cannula. The actuator is formed with a distal opening formed at a distal end of the actuator, and a proximal opening formed at a proximal end of the actuator with a centralized hollow bore extending from the distal opening to the proximal opening, thereby defining a hollow channel.

More precisely, the outer cannula is a hollow tube fixedly attached at the distal end of the actuator such that the open proximal end of the cannula coincides with the distal opening of the actuator distal end. The stylet is slidably and centrally disposed within the actuator from the proximal end through the hollow channel and through the distal end. The stylet is also of predetermined length such that it is slidably and cen-

trally located through the outer cannula, with the distal tip of the stylet protruding past the open distal end of the cannula.

The various actuators of the present invention must be connected electrically to an external electrical signal source. Upon excitation by the electrical signal, the actuators convert the signal into mechanical energy that results in vibratory motion of an end-effector, such as an attached needle or stylet. In the case of a Langevin actuator, the vibratory motion produced by the piezoelectric materials generates a standing wave through the whole assembly such as that in graph in FIG. **17**. Because at a given frequency, a standing wave is comprised of locations of zero-displacement (node, or zero node) and maximum displacement (anti-node—not shown) in a continuous manner, the displacement that results at any point along the actuator depends on the location where the displacement is to be measured. Therefore, the horn is typically designed with such a length so as to provide the distal end of the horn at an anti-node when the device is operated. In this way, the distal end of the horn experiences a large vibratory displacement in a longitudinal direction with respect to the long axis of the actuator. Conversely, the zero node points are locations best suited for adding port openings or slots so as to make it possible to attach external devices to the actuator. As indicated by line ZN, the port opening SP coincides with the zero node location and the smaller displacement at zero node points are less abrasive to an attached device.

Accordingly, an alternative embodiment, the actuator may be formed with a distal opening formed at the distal end of the actuator, a port opening on at least a portion of the actuator, and a hollow bore extending from the distal opening to and in communication with the port opening. Preferably, the port opening may be a side port on a horn side of the actuator. More preferably, the port opening is generally located (preferably centered) at a zero node location of the actuator, and most preferably centered at a zero node location on a horn side of the actuator. Additionally, a means for providing feedback, for example any of those conventional feedback devices disclosed above used for indication of successful body location such as the epidural space penetration is in communication with the present embodiment by attachment at the port opening location, or preferably at the side port. Alternatively, any means capable of delivering fluid, such as a catheter tube or conventional syringe can be attached at the port opening location, or preferably at the side port.

The present invention relates generally to oscillatory or translational actuated handheld device for penetration through various tissues within a body for the delivery or removal of bodily fluids, tissues, nutrients, medicines, therapies, placement or removal of catheters, etc. For example for piezoelectric devices, the present invention is a handpiece including a body, at least one piezoelectric element disposed within the body, and a sharps member for tissue penetration, such as a syringe, epidural needle or biopsy needle located at a distal portion of the handheld device, having a feedback means capable of indicating successful penetration of the body space, such as epidural space by providing visual, audible or tactile indications using any well-known detection mechanisms such as but not limited to electrical, magnetic, pressure, capacitive, inductive, etc. means.

Additionally, with the use of proper circuitry the handheld medical device comprising an actuator is provided with a means for shutting off external power to the driving actuator (e.g., one or more of piezoelectric elements, voice coil, solenoid, other oscillatory or translational actuator, etc.) upon penetration of a particular tissue or internal portion of a body such as the epidural space. The means for shutting off external power to the driving actuator may be implemented as part of the aforementioned means for providing visual, audible or tactile indications or may be a separate means altogether. Preferably the means for shutting off external power to the driving actuator upon penetration of a particular tissue or internal portion of for example, the epidural space, may be accomplished by incorporating proper circuit configurations to aforementioned electrical means to trigger a switching means in order to cut off power to the driving actuator. Such a means is described in U.S. Pat. No. 5,575,789 (Bell et al.) whose entire disclosure is incorporated by reference herein. By providing such electrical cut-off means, upon successfully penetrating the epidural space for example, a clinician receives one or more of a visual, audible, and tactile indications as well as a loss of power to the device as a secondary indication that a particular internal portion of a body has been penetrated. Furthermore, with a loss of power to the device by cutting off electrical power to the driving actuator, the force or forward momentum necessary for further penetration of tissue will cease and in turn, will decrease the potential for unwanted body area puncture such as accidental dural puncture.

Additionally the invention with specific control electronics will provide reduction of force as the penetrating member is retracted from the body.

In one embodiment, the penetrating or sharp tubular member is a part of a vascular entry needle.

In another embodiment, the penetrating sharp tubular member is a Tuohy needle.

In yet another embodiment, the penetrating or sharp tubular member is a trocar and stylet assembly, such as a JAMSHIDI® biopsy needle.

In yet another embodiment, the penetrating or sharp tubular member is a pencil point tipped needle.

In yet another embodiment, the penetrating or sharp tubular member is part of a trocar access port.

These and other features of this invention are described in, or are apparent from, the following detailed description of various exemplary embodiments of this invention.

BRIEF DESCRIPTION OF THE DRAWINGS

Exemplary embodiments of this invention will be described with reference to the accompanying figures.

FIG. **1** is a partial isometric view of a distal end of a prior art biopsy needle;

FIG. **2** is a partial side view of a distal end of a prior art epidural needle;

FIG. **2***a* is a plan view of a conventional prior art loss of resistance syringe;

FIG. **3** is a graph illustrating the penetration force of a penetrating member;

FIG. **4** is a cross section of a Langevin actuator, more commonly referred to as a Langevin transducer, for use as an actuator in a first embodiment of the present invention;

FIG. **4***a* is needle design with the side port located in the penetrating member hub providing external access such as for pressure sensor connection or catheter entry location.

FIG. **5** is a cross section of a vascular entry needle used in a first embodiment of the invention;

FIG. **6** is a cross section of a plunger used in a first embodiment of the invention;

FIG. **6***a* depicts the present invention including a sterilization sleeve for wires and housing;

FIG. **6***b* depicts the present invention including a battery and inverter compartment attached at the end of the actuator;

FIG. **7** is a cross section of a first embodiment of the invention;

FIG. **7***a* is a cross-section of an alternate design of the first embodiment of the invention that incorporates the side port on the penetrating member hub.

FIG. **8** is a cross section of another alternate design of the first embodiment of the invention of FIG. **7**;

FIG. **9** is an isometric view of a second embodiment of the present invention;

FIG. **9***a* is an isometric view of an alternate design of the second embodiment using a side port on the actuator for attachment location of the pressure sensor or entry of a catheter;

FIG. **9***b* is an isometric view of more preferred alternate design of the second embodiment using a side port on the penetrating member hub for attachment location of the pressure sensor or entry of a catheter;

FIG. **10***a* is a cross section of an inner stylet for use in a third embodiment of the present invention;

FIG. **10***b* is a cross section of an outer penetrating member, such as a trocar, for use in a third embodiment of the present invention;

FIG. **10***c* is a cross section showing the relative positioning of the inner stylet of FIG. **10***a* within the outer penetrating member of FIG. **10***b* for use in a third embodiment of the present invention;

FIG. **11** is a cross section of a third embodiment of the present invention;

FIG. **12** is a cross section of a fourth embodiment of the present invention;

FIG. **13** is a cross section of a penetrating member attached to an amplified piezoelectric actuator for use in a fifth embodiment of the present invention;

FIG. **13***a* is cross section of an alternate APA design of a penetrating member with side port for use the present invention;

FIG. **14** is a cross section of a fifth embodiment of the present invention;

FIG. **14***a* is a cross section of the fifth embodiment of the present invention using a penetrating member with side port of FIG. **13***a;*

FIG. **15** is a cross section of a sixth embodiment of the present invention comprising a Cymbal actuator;

FIG. **16** is a cross section of the sixth embodiment of the present invention using the penetrating member with side port of FIG. **13***a;*

FIG. **17** shows the correlation between zero node points of a standing wave and the location of a side port on a Langevin actuator without the actuator handle shown;

FIG. **17***a* shows the correlation between zero node points of a standing wave and the location of a side port on the penetrating member connected to the Langevin actuator;

FIG. **18***a* is a functional diagram of a seventh embodiment of the present invention depicting a side port at a zero node location on a Langevin actuator without the handle shown;

FIG. **18***b* is a functional diagram of a seventh embodiment of the present invention comprising the side port of FIG. **18***a* in communication with a central channel extending the length of a Langevin actuator and without the handle shown;

FIG. **18***c* is a sketch of a eighth embodiment of the present invention comprising two side ports in communication with needle attachment one connected to the front portion of the Langevin actuator and the other connected to the penetrating member without the actuator handle shown;

FIG. **18***d* is a sketch of a eighth embodiment of the present invention comprising the side port connected to the short bore and communication with needle attachment that is also connected to the front portion of the Langevin actuator and without the handle shown of the actuator of FIG. **18***a;*

FIG. **19** is a drawing of a ninth embodiment of the present invention comprising a conventional syringe of FIG. **2***a* attached at the side port location of the actuator shown in FIG. **18** and without the actuator handle shown;

FIG. **19***a* is a drawing of a ninth embodiment of the present invention comprising a conventional syringe of FIG. **2***a* attached at the side port location of the penetrating member hub shown in FIG. **18***c* with the actuator also connected into the hub and without the actuator handle shown;

FIG. **19***b* is a drawing of a pressure sensing pump system for connection to a penetrating member.

FIG. **20***a* is a cross-sectional view of a tenth embodiment of the present invention using a voice coil for the driving actuator;

FIG. **20***b* is a cross-sectional view of the tenth embodiment of the present invention using a voice coil for the driving actuator wherein the position of the magnetic member and the coil are reversed from that of FIG. **20***a;*

FIG. **20***c* is an isometric cross-sectional view of the tenth embodiment of the present invention using two coils;

FIG. **20***d* is a side cross-sectional view of the tenth embodiment of the present invention using a solenoid with springs; and

FIG. **21** is an exemplary schematic of an electrical power cut off for use in the various embodiments of the present invention.

BRIEF DESCRIPTION OF THE INVENTION

The preferred embodiments of the present invention are illustrated in FIGS. **3-21** with the numerals referring to like and corresponding parts. For purposes of describing relative configuration of various elements of the invention, the terms "distal", "distally", "proximal" or "proximally" are not defined so narrowly as to mean a particular rigid direction, but, rather, are used as placeholders to define relative locations which shall be defined in context with the attached drawings and reference numerals. A listing of the various reference labels are provided at the end of this Specification. In addition, U.S. Ser. No. 12/163,071 entitled "Medical Tool for Reduced Tool Penetration Force," filed on Jun. 27, 2008 is incorporated by reference in its entirety.

The effectiveness of the invention as described, for example, in the aforementioned preferred embodiments, utilizes reduction of force to optimize penetrating through tissue or materials found within the body. Essentially, when tissue is penetrated by the high speed operation of a penetrating member portion of the device, such as a needle, the force required for entry is reduced. In other words, a reduction of force effect is observed when a penetrating member (also referred to as a "tubular member"), for example a needle, is vibrated axially (e.g., reciprocated) during the insertion process and enough mechanical energy is present to break adhesive bonds between tissue and the penetrating member. The threshold limits of energy can be reached in the sonic to ultrasonic frequency ranges if the necessary amount of needle displacement is present.

To exploit the reduction of force effect, the medical device of the present invention is designed such that the penetrating distal tip portion attains a short travel distance or displacement, and vibrates sinusoidally with a high penetrating frequency. Utilizing the various device configurations as described in the aforementioned embodiments, it has been determined that the sinusoidal motion of the sharp distal tip must include a displacement for piezoelectric tools of between 35-100 μm, more preferably between 50-100 μm, at a frequency of between 20-50 kHz, but most preferably at

20-25 kHz. This motion is caused by the penetrating member **20** being attached to an actuating piezoelectric actuator operated at 50-150 Vpp/mm, but most preferably at 90 Vpp/mm where Vpp is known as the peak-to-peak voltage.

For example, FIG. **3** shows a graphical representation of the resisting force versus depth of a bone biopsy needle penetrating into hard tissue. In FIG. **3**, the curve labeled A represents data for a needle in an "off" or non-vibrating condition and the curve labeled B represents data for a medical device having a needle that is vibrated by a piezoelectric actuator at 38 kHz and a displacement of 100 μm. As apparent from FIG. **3**, curve A shows that without being vibrated, the force necessary to penetrate into a material is much higher than that for a needle being oscillated, such as that represented by curve B.

By way of example only, referring to FIG. **4**, a Langevin actuator, generally indicated as **100**, comprises a piezoelectric actuator which includes a body having a central hollow channel and includes a displaceable member (also referred to as a "horn") **110**, an anchor (also referred to as a "rear mass") **112** and at least one piezoelectric element **114**, but preferably comprises more than one. In particular, each piezoelectric element **114** may be formed into a piezoelectric ring that forms a hollow portion and wherein the piezoelectric elements **114** are secured within the body and attached between horn **110** and rear mass **112**. A hollow or solid threaded bolt **116** is disposed within a center portion of rear mass **112**, extending through a center portion of the at least one of piezoelectric elements **114** and ending within a central portion of horn **110**. The bolt compresses the rear mass **112**, the at least one of piezoelectric elements **114** and horn **110**. The horn **110** and rear mass **112** are made of a metal such as titanium, stainless steel, ceramic (which include polycrystalline and single crystal inorganic materials), plastic, composite or, preferably, aluminum. The bolt **116** is of the same material as the horn **110** and rear mass **112**. To protect patient and clinician from electric shock, at least a portion of the Langevin actuator **100**, preferably at least the whole of the rear body **112**, all of the at least one piezoelectric elements **114**, and at least a portion of the horn **110**, are disposed within a handle **118**. Electrical connection is made at metallic tabs (not shown) formed between opposing faces of the at least one of piezoelectric elements **114**. These tabs can be coupled via electrical conductors **114***b* connected to an AC power source or battery (e.g., positioned within a battery compartment of the present invention). The handle **118** comprises a shell portion which may be a plastic or a metal and a seal **120** which may be an elastomer. Seal **120** prevents moisture from entering or exiting from the central portions of the rear mass **112**, piezoelectric elements **114** and horn **110**. The central portion of the rear mass **112**, piezoelectric elements **114** and horn **110** coincide with the hollow portion of the bolt **116** forming a continuous bore **126** within the Langevin actuator **100**, the bore **126** having a distal opening **122** at a distal face **121** and a proximal opening **124** at a face opposite to the distal face **121**. A Luer taper nose **123** is added to the actuator for clarity of connection.

It should be understood that the number of piezoelectric elements **114** does not form a limitation on the present invention and that it is within the broadest scope of the present invention to include one or more piezoelectric elements **114**.

According to an alternative embodiment, a side port (not shown) may be formed at the horn **110** side of the actuator and the continuous bore **126** extends from a distal opening **122** at distal face **121** and in communication with this side port.

The functional performance of the medical device is driven by the piezoelectric elements section. Piezoelectric elements **114**, such as each of one or more piezoelectric material rings are capable of precise, controlled displacement and can generate energy at a specific frequency. The piezoelectric materials expand when exposed to an electrical input, due to the asymmetry of the crystal structure, in a process known as the converse piezoelectric effect. Contraction is also possible with negative voltage. Piezoelectric strain is quantified through the piezoelectric coefficients d_{33}, d_{31}, and d_{15}, multiplied by the electric field, E, to determine the strain, x, induced in the material. Ferroelectric polycrystalline materials, such as barium titanate (BT) and lead zirconate titanate (PZT), exhibit piezoelectricity when electrically poled. Simple devices composed of a disk or a multilayer type directly use the strain induced in a material by the applied electric field. Acoustic and ultrasonic vibrations can be generated by an alternating field tuned at the mechanical resonance frequency of a piezoelectric device. Piezoelectric components can be fabricated in a wide range of shapes and sizes. In one embodiment, piezoelectric component may be 2-5 mm in diameter and 3-5 mm long, possibly composed of several stacked rings, disks or plates. The exact dimensions of the piezoelectric component are performance dependent. The piezoelectric single or polycrystalline materials may be comprised of at least one of lead zirconate titanate (PZT), multilayer PZT, lead magnesium niobate-lead titanate (PMN-PT), multilayer PMN-PT, lead zinc niobate-lead titanate (PZN-PT), polyvinylidene difluoride (PVDF), multilayer PVDF, and other ferroelectric polymers. These materials also can be doped which changes properties and enhances the performance of the medical device. This list is not intended to be all inclusive of all possible piezoelectric materials. For example there is significant research into non-lead (Pb) containing materials that once developed will operate in this invention.

In the embodiment shown in FIG. **4***a* the side port SP is located on the penetrating member hub **525** of the hollow needle **130**. In this alternate embodiment the hollow needle **130** penetrating member hub **525** is preferably metal or a combination of metal insert molded in a plastic. The side port SP would contain a female Luer taper opening to attach a loss of resistance conventional syringe PA**3**.

Referring now to FIG. **5**, a penetrating member, generally indicated as **20**, for use in a first embodiment of the present invention comprises an attachment fitting **128** connected to proximal end **130***b* and the distal end **130***a* of a hollow needle **130** penetrates tissue. By way of example only, the attachment fitting **128** may comprise a Luer taper, plastic or metal fitting.

Referring now to FIG. **6**, a plunger **12** for use in a first embodiment of the present invention comprises a plunger handle **132** attached to a proximal end **134***a* of a plunger shaft **134**, and a plunger seal **136** attached to a distal end **134***b* of the plunger shaft **134**. The plunger seal is used to seal the handle **118** so that contaminates such as water or bodily fluids do not reach the actuator elements or electrical connections. In another embodiment, the plunge will create a vacuum in the hollow penetrating member to aspirate bodily fluids and/or tissue for sampling such as in a soft tissue biopsy procedure.

In the most preferred embodiment, the side port is located on the penetrating member hub **525** at the end attachment point

Referring now to FIG. **7**, a first embodiment of the present invention, for example a penetrating introducer, generally indicated as **200**, comprises an actuator, such as the Langevin actuator **100** described in FIG. **4**, with the penetrating member **20** of FIG. **5** being attached at a distal face **121** of the actuator. The needle attachment fitting **128** is a threaded fitting, Luer taper, compression fitting or the like, and couples hollow needle **130** to a portion of distal face **121** such that it

communicates with a distal volume of continuous bore **126**. Plunger handle **132** may be a threaded, clamped, compressed or the like to bolt **116** so as to immobilize plunger **12** of FIG. **6**. The present invention is sterilizable using such methods as steam sterilization, a sleeve, gamma, ethylene oxide (ETO). For example, FIG. **6***a* depicts a sterilization sleeve **115** for wires and housing used with the present invention. The preferred material for the needle attachment **128** is a metal or a metal insert in a molded plastic. FIG. **6***b* shows the Langevin actuator **100** with a possible configuration of the battery & inverter compartment **117** attached to the end of the actuator.

Returning to FIGS. **4** and **7**, upon application of an external AC current at a predetermined frequency to the at least one of piezoelectric elements **114**, the Langevin actuator **100** reactively changes shape in a sinusoidal fashion such that the relative position of distal face **121** with respect to say, a fixed position of plunger handle **132** attached to and held in place by bolt **116**, changes by a predetermined displacement. Because the AC current is a sinusoidal signal, the result of activating the piezoelectric elements **114** is a sinusoidal, back and forth motion of the distal face **121** of horn **110**, and, subsequently, a back and forth motion of needle **130**, thereby reducing the force necessary for penetration through tissue. As mentioned previously, the AC energization can be provided directly from an AC source or from a DC source (e.g., onboard batteries) coupled to an inverter (e.g., oscillator/amplifier, etc.) which in turn is coupled to the piezoelectric elements **114**. The DC source is the more preferred embodiment as wires and connections will need additional sterilization features.

FIG. **7***a* depicts a similar invention as shown in FIG. **7** but includes a penetrating member hub **525** with a side port SP connected to the hollow needle **130**. This configuration enables pressure sensor to be mounted in the side port SP which once removed provides for a catheter to be inserted or fluids removed. This is likely the preferred embodiment when compared to FIG. **7** as the entire active device will not be at risk for contamination since the catheter or fluids do not traverse the actuator only the hollow needle **130** which could be manufactured for single use.

Referring to FIG. **8**, a supported introducer, generally indicated as **201**, is similar to the penetrating introducer **200** of FIG. **7** additionally comprising support wings **111**, existing for example as a flat portion onto which a user can grasp, and extending radially from an outer surface forming a mechanical zero node of the horn **110**, as described later with regard to FIG. **17**. A side port SP (not shown) could be 90 degrees clockwise or counterclockwise from the support wings that may be a location for providing access for aspirated sample retrieval, catheter insertion etc.

In an alternate embodiment of the present invention, the penetrating introducer **201** of FIG. **8** exists as a catheterization introducer, generally indicated as **202**, as shown in FIG. **9**. In this embodiment, rather than a plunger being introduced from a proximal end of the device, a catheter **129** is introduced from the proximal end of the device and is received through bore **126** as shown in FIG. **4**, and may be passed through hollow needle **130**. Upon having been inserted into a patient, hollow needle **130** forms a subcutaneous tunnel through which catheter **129** is introduced into the body. Upon successful introduction, the actuator may be detached from hollow needle **130** by decoupling attachment fitting **128** from the horn **110**.

A more preferred embodiment **202***b* is shown in FIG. **9***a* where a side port SP permits the introduction of the catheter **129** into the present invention, rather than through the proximal end, as shown in FIG. **9**. This configuration enables pressure sensor to be mounted in the side port SP which once removed enables a catheter to be inserted or fluids removed near the distal face **121** of the device. This is likely the preferred embodiment when compared to FIG. **9** as the entire active device will not be at risk for contamination since the catheter or fluids do not traverse the entire actuator.

In the most preferred embodiment **202***c* is shown in FIG. **9***b* where the side port SP located on the penetrating member hub **525** permits a pressure sensor to be mounted in the side port SP which once removed provides entry of an instrument such as a catheter **129** to be inserted or fluids aspirated. This is likely the preferred embodiment when compared to FIG. **9** as the entire active device will not be at risk for contamination since the catheter or fluids do not traverse the actuator only the hollow needle **130**.

Now referring to FIG. **10***a*, an inner stylet, generally indicated as **14**, comprises an inner stylet handle **142** attached to a proximal end of an inner stylet shaft **144**. At a distal end of the inner stylet shaft **144**, opposite to the handle **142** is a sharpened inner stylet tip **146**. To support the inner stylet shaft **144**, an outer trocar tube, generally indicated as **15**, shown in FIG. **10***b* comprises a trocar attachment fitting **148** attached at a proximal end of an outer trocar body **150**, which is a tubular structure open at opposite ends. The trocar attachment fitting **148** is hollow such that outer trocar body **150** is disposed within it. Additionally, one of the openings formed at opposite ends of the trocar body **150** is a distal trocar opening **152**, the outer walls of which form distal trocar tip **154**. As shown in FIG. **10***c*, inner stylet shaft **144** may be slidably disposed within outer trocar body **150** with inner stylet tip **146** extending beyond distal trocar tip **154**. Together, the inner stylet **14** of FIG. **10***a* and outer trocar tube **15** of FIG. **10***b* form a structure similar to a trocar needle (e.g., a JAMSHIDI® biopsy tool).

Referring now to FIG. **11**, inner stylet **14** is slidably disposed within bore **126** of Langevin actuator **100** of FIG. **4** and outer trocar tube **15** of FIG. **10***b*, with outer trocar tube **15** attached to horn **110** to form a bone biopsy device, generally designated as **300**. Inner stylet **14** extends in a manner such that handle **142** contacts bolt **116** when fully seated, with inner stylet shaft extending from handle **142** through proximal opening **124**, through bore **126** and hollow portion of outer trocar body **150** finally terminating as inner stylet tip **146** at a location beyond distal trocar tip **154**. In this embodiment, when the at least one of piezoelectric elements **114** of Langevin actuator **100** of FIG. **4** is electrically actuated via electrical conductors **114***b* at a predetermined frequency, motion in the form of compression and expansion of the rings is transferred to an anti-node location at the distal face **121** of horn **110**. The motion is then transferred as actuation of outer trocar tube **15** of FIG. **10***b*.

In an alternate embodiment, an advanced bone biopsy device, generally indicated as **400**, shown in FIG. **12**, comprises all of the elements of bone biopsy device **300** of FIG. **11**, except that upon electrical activation of Langevin actuator **100** of FIG. **4** at a predetermined frequency, the motion is transferred as actuation of inner stylet **14**. To perform this function, the positioning of the inner stylet shaft **14** of FIG. **10***a* and outer trocar tube **15** of FIG. **10***b* are inverted with respect to the configuration of FIG. **11**. For example, in the advanced bone biopsy device **400**, outer trocar tube **15** is attached to bolt **116**. Additionally, inner stylet **14** extends in a manner such that handle **142** contacts distal face **121** of horn **110** when fully seated, with inner stylet shaft **144** extending from handle **142** through distal opening **122**, through bore

126 and hollow portion of outer trocar body 150, finally terminating as inner stylet tip 146 at a location beyond distal trocar tip 154.

While the previous embodiments have been described with respect to a Langevin actuator 100 as the actuating mechanism, the invention is not so limited. For example, as shown in FIG. 13, a hollow tubular structure having a sharpened distal tip 513*b* of the penetrating member 513 is attached at its proximal end 513*a* to an Amplified piezoelectric actuator (APA) 510 forming an APA needle, generally designated as 16. The amplified piezoelectric actuator (APA) 510 comprises a frame 512, normally formed of a metal such as brass or stainless steel, and a piezoelectric material 514 compressed within frame 512. An APA bore 526 may extend from a distal face through piezoelectric material 514 and through a proximal face 512*a* of frame 512. Hollow penetrating member 513, for example a hypodermic needle, is attached to the distal face 512*b* of frame 512, such that the hollow portion is concentrically aligned with the APA bore 526. As shown in FIG. 14, APA needle 16 may be disposed within a handle 518 forming an APA syringe, generally designated as 500. Important to this embodiment is that a proximal face 512*a* of frame 512 of amplified piezoelectric actuator (APA) 510 must be fixed as shown at 516 attachment point to an inner portion of handle 518 such that the APA bore 526, hollow penetrating member 513, a handle proximal opening 524 and handle distal opening 521 form a continuous channel through which fluids may pass into a patient. FIGS. 13*a* and 14*a* show alternate embodiments 16*b* and 500*b*, respectively, with a detachable penetrating member hub 525 enabling the single use penetrating member with re-usable active motion handle where the penetrating member hub 525 is described previously.

In operation, the piezoelectric material 514 expands during the AC voltage cycle, which causes the frame's proximal and distal faces 512*a*, 512*b* formed opposite of one another to move inward toward each other. Conversely, when piezoelectric material 514 compresses during the opposite AC cycle, an outward displacement of the frame's proximal and distal faces 512*a*, 512*b* away from one another occurs. However, in the present embodiment, the proximal face 512*a* of the frame is fixedly attached to body's 518 attachment point 516 so that any movement in the piezoelectric material stack will result in only a relative motion of distal face 512*b* and, thereby, a motion of the penetrating member 513.

Two examples of applicable amplified piezoelectric actuators (APAs) are the non-hinged type, and the grooved or hinged type. Details of the mechanics, operation and design of an example hinged or grooved APA are described in U.S. Pat. No. 6,465,936 (Knowles et al.), which is hereby incorporated by reference in its entirety. An example of a non-hinged APA is the Cedrat APA50XS, sold by Cedrat Technologies, and described in the Cedrat Piezo Products Catalogue "Piezo Actuators & Electronics" (Copyright© Cedrat Technologies June 2005).

Preferably, the APAs of the present invention are operated at frequencies in the range of 100 Hz to 20 kHz, more preferably 100 Hz to 1 kHz.

Alternatively, the actuator of the present invention may be a Cymbal actuator. For example, in FIG. 15, a Cymbal syringe, generally indicated as 600, including a Cymbal actuator 610 which comprises two endcaps 612 with the distal endcap 612*b* and proximal endcap 612*a* with at least a piezoelectric element 514 formed between the endcaps. The Cymbal syringe is centered on the Cymbal bore 626. The endcaps 612 enhance the mechanical response to an electrical input, or conversely, the electrical output generated by a mechanical load. Details of the flextensional Cymbal actuator technology is described by Meyer Jr., R. J., et al., "Displacement amplification of electroactive materials using the Cymbal flextensional transducer", Sensors and Actuators A 87 (2001), 157-162. By way of example, a Class V flextensional Cymbal actuator has a thickness of less than about 2 mm, weighs less than about 3 grams and resonates between about 1 and 100 kHz depending on geometry. With the low profile of the Cymbal design, high frequency radial motions of the piezoelectric material are transformed into low frequency (about 20-50 kHz) displacement motions through the cap-covered cavity. An example of a Cymbal actuator is described in U.S. Pat. No. 5,729,077 (Newnham et al.) and is hereby incorporated by reference. While the endcaps shown in the figures are round, they are not intended to be limited to only one shape or design. For example, a rectangular Cymbal endcap design is disclosed in Smith N. B., et al., "Rectangular Cymbal arrays for improved ultrasonic transdermal insulin delivery", J. Acoust. Soc. Am. Vol. 122, issue 4, October 2007. Cymbal actuators take advantage of the combined expansion in the piezoelectric charge coefficient d_{33} (induced strain in direction 3 per unit field applied in direction 3) and contraction in the d_{31} (induced strain in direction 1 per unit field applied in direction 3) of a piezoelectric material, along with the flextensional displacement of the endcaps 612, which is illustrated in FIG. 15. The design of the endcaps 612 allows both the longitudinal and transverse responses to contribute to the strain in the desired direction, creating an effective piezoelectric charge constant (d_{eff}) according to the formula, $d_{eff}=d_{33}+(-A*d_{31})$. Since d_{31} is negative, and the amplification factor (A) can be as high as 100 as the endcaps 612 bend, the increase in displacement generated by the Cymbal compared to the piezoelectric material alone is significant. The endcaps 612 can be made of a variety of materials, such as brass, steel, titanium or KOVAR™, a nickel-cobalt ferrous alloy compatible with the thermal expansion of borosilicate glass which allows direct mechanical connections over a range of temperatures, optimized for performance and application conditions. The endcaps 612 also provide additional mechanical stability, ensuring long lifetimes for the Cymbal actuators.

The Cymbal actuator 610 drives the penetrating member 513. When activated by an AC current, the Cymbal actuator 610 vibrates sinusoidally with respect to the current's frequency. Because endcap 612*a* is fixed to an inner sidewall of body 518, when Cymbal actuator 610 is activated, endcap 612*b* moves with respect to the body in a direction parallel to the hypothetical long axis of the medical device. Further, the displacement of penetrating member 513 is amplified relative to the displacement originating at piezoelectric material 514 when it compresses and expands during activation due in part to the amplification caused by the design of endcaps 612. For example, the piezoelectric material 514 alone may only displace by about 1-2 microns, but attached to the endcaps 612, the Cymbal actuator 610 as a whole may generate up to about 1 kN (225 lb-f) of force and about 80 to 100 microns of displacement. This motion is further transferred through the penetrating member 513 as an amplified longitudinal displacement of 100-300 microns. For cases requiring higher displacement, a plurality of Cymbal actuators 610 can be stacked endcap-to-endcap to increase the total longitudinal displacement of the penetrating member 513. FIG. 16 shows an alternate embodiment 600*b* with a detachable penetrating member hub 525 enabling the single use penetrating member with reusable active motion handle.

In alternate embodiments of the present invention, an additional port opening is formed in communication with a channel formed within the body of the actuator, for example a Langevin actuator. In particular, FIGS. 17-19 are directed to

these alternate embodiments and it should be noted that for clarity reasons, the handle **118** of the Langevin actuator is not shown in these figures.

Because the port opening is provided so as to attach a means for providing visual, audible or tactile feedback response (e.g., using any well-known detection mechanisms such as but not limited to electrical, magnetic, pressure, capacitive, inductive, etc. means) to indicate the successful penetration of the specific tissue such as the epidural space, it must be formed at a location which will be least detrimental to such means. In other words, because the actuator vibrates at high frequencies, each point along the actuator experiences a different displacement defined by a standing wave. In FIG. **17**, a displacement graph G**1** represents a standing wave having longitudinal displacements at points along the length of a Langevin actuator operated at 38 kHz. As can be seen in a displacement graph G**1**, two nodes having near zero displacement exist at particular locations in the standing wave. The two node ("zero node" ZN) locations on the Langevin actuator LT are therefore defined at a particular lengths along the Langevin actuator. In the specific design shown in FIG. **17** the nodes on the standing wave correspond to zero node, or locations having minimum displacements on the Langevin actuator LT. The locations of the zero nodes on the Langevin actuator LT are then located at a proximal face (not shown) of the rear mass opposite to the distal face **121**. Line ZN defines the physical location of the other zero node at which a side port SP should be located, preferably centered, when formed in a Langevin actuator LT relative to second zero node of the standing wave in displacement graph G**1**. In the case shown in FIG. **17**, the side port SP is formed at the horn **110** of the Langevin actuator LT, however a port opening is not necessarily so limited. A port opening can be placed anywhere along an actuator but a zero node location is preferred.

In a more preferred embodiment, FIG. **17***a* describes the side port SP location on the zero node ZN of the penetrating member hub **525**. In this embodiment, the design length includes both the needle length and actuator length to achieve the zero node ZN on the hollow needle **130** which includes length of penetrating member hub **525**. A side port SP can be placed anywhere along hollow needle **130** but a zero node location on the penetrating member hub **525** is preferred.

In FIG. **18***a*, a general side port configuration **700** of the present invention is shown with a side port SP as the port opening centered at a zero node location along the horn **110**. Support wings **111** are also formed at a zero node to assist the clinician is holding and stabilizing the device.

In a seventh embodiment of the present invention shown in FIG. **18***b*, a first side port configuration **700***a* has a channel for passing liquid, air or other materials comprises a continuous path from the proximal opening **124** through bore **126** passing through a distal opening (not shown) and extending through hollow needle **130** ending at a distal end **130***a* of the hollow needle which is open. In this seventh embodiment, the channel is in communication with the side port SP at a location along bore **126**. Preferably, the side port SP is located at such a location along the actuator forming the first side port configuration **700***a* that acts as a zero node upon activating the device to vibrate.

Alternatively, as shown in an eighth embodiment of the invention in FIG. **18***c*, a second side port configuration **700***b* has a channel for passing liquid, air or other materials comprises a continuous path located on the hollow needle **130** penetrating member hub **525**. In this eighth embodiment, the channel is in communication with the side port SP at a location along penetrating member hub **525**. Preferably, the side port SP is located at such a location along the entire length (actuator and penetrating member) forming the second side port configuration **700***b* that acts as a zero node upon activating the device to vibrate. In a secondary side port SP located on the actuator an indicator such as a light emitting diode **1026** can be attached and connected to the electronics to indicate a visual loss of resistance.

Alternatively, as shown in an eighth embodiment of the invention in FIG. **18***d*, a second side port SP configuration **700***c* has a small bore **126***a* for passing liquid, air or other materials located at zero node ZN to and from the hollow needle **130**.

In a ninth embodiment of the present invention shown in FIG. **19**, a feedback capable reduction of force tool **800** is provided. By way of example only, tool **800** comprises a means for providing tactile feedback response via a conventional loss of resistance syringe PA**3** having a biasing element **11** with a plunger or balloon (e.g., elastomer device) or any other device that creates pressure then detects or measures pressure change. This device is coupled at a port location, preferably a side port SP located, via, by way of example only, a Luer Taper, male/female connector, screw-type connector, and preferably centered, at a zero node location. The tool **800** also includes an indicator in communication with the actuator **700** such as, but not limited to, an audible indicator, tactile indicator, or visual (e.g., deflation, optical, etc.).

In a most preferred embodiment of the present invention shown in FIG. **19***a*, a feedback capable reduction of force tool **800** is located on the hollow needle **130** at a zero node ZN on the penetrating member hub **525**.

Another embodiment described in FIG. **19***b*, a possible pressure sensor feedback system **1020** containing a small pumping mechanism equipped with a pressure or flow sensor to meter the amount of fluid being moved, a reservoir **1021** mounted on a base **1024**. The pump fills with saline and connect via flexible tubing **1022** via an attachment fitting **1023** to the side port SP of the penetrating member. When loss of resistance (LOR) is detected, the electronic control system will close a switch and an indicator such as a light emitting diode (LED) (not shown) located on the side port SP of the actuator will turn-on indicating loss of resistance. The electronics control system at this point will turn the actuator off so that forward motion ceases. In additional embodiment, besides the visual signal, an audible signal a 'beep' could be incorporated into the pump system.

By way of example only, the following is an exemplary method of using the present invention, whereby a clinician uses the present invention for an epidural procedure. When performing an epidural procedure, the clinician first fills syringe PA**3** with a fluid, such as a saline solution or air. The clinician then inserts the front portion **9** of the syringe into the side port SP of the actuator **700***b*. Upon electrically activating the actuator, the clinician holds actuator **700***b* with a first hand while pressing the distal end **130***a* of the hollow needle against a patient's back. The clinician continues to provide forward momentum, while also providing a biasing force against biasing element **11**, advancing hollow needle **130**. With continued forward momentum, the hollow needle punctures the supraspinous ligament, the instraspinous ligament, and the ligamentum flavum (see FIG. **7**, for example). Upon puncturing the ligamentum flavum, the distal end **130***a* of the needle enters the epidural space at which point there is a pressure drop from the biasing element **11** to the opening at the distal end **130***a*. The pressure drop allows for the solution to be ejected from the opening at the distal end **130***a*, and the continued biasing of the biasing element **11** combined with the loss of volume of saline results in a loss of resistance (LOR) against the clinician's thumb and a visibly identifiable

motion of the biasing element **11**. When the biasing element moves due to this lack of resistance, the clinician quickly identifies that the epidural space has been successfully reached and quickly stops forward momentum of the actuator. Additionally, because the activation of the actuator results in a vibration of the needle **130**, the clinician does not need to provide such a high penetration force and can quickly react to stop himself/herself before advancing the needle beyond the epidural space.

It should be further noted that it is within the broadest scope of the present invention to include syringes or other mechanisms which provide automatic biasing, such that the clinician does not have to apply a biasing force against the biasing element **11** prior to entry into, for example, the epidural space. In particular, the automatic biasing force (implemented, for example, via a spring, an elastomer, or any other well-known biasing mechanism such as, but not limited to, those described in U.S. Patent Publication No. 2007/0142766 (Sundar, et al.)) maintains an equal resistance as the needle is moved through the supraspinous ligament, the instraspinous ligament, and the ligamentum flavum. Upon entry into the epidural space, the biasing force is no longer resisted and this can be manifested in a variety of ways to the clinician, but not limited to, movement of the biasing element, or any other visual, audible or tactile indication using any well-known detection mechanisms such as but not limited to electrical, magnetic, pressure, capacitive, inductive, etc. means. For example, a pressure signal indicative of a loss of solution resistance automatically cuts off power to the driver actuator (e.g., piezoelectric elements, voice coil, solenoid, etc.).

While feedback means have been coupled to the side port SP, the invention is not so limited to feedback means. Any device may be coupled to a port location of the actuator, or ideally at the side port SP location even those devices simply being a means for providing or removing liquid, gas or other material such as a conventional syringe.

While the above-described embodiments of the present invention are made with respect to a handheld medical tool having a vibrating penetrating member and utilizing a Langevin actuator, Cymbal actuator, or APA for actuation, as mentioned earlier, the present invention is not limited to these actuator assemblies. Generally, any type of motor comprising an actuator assembly, further comprising a mass coupled to a piezoelectric material, or a voice coil motor, or solenoid, or any other translational motion device, would also fall within the spirit and scope of the invention. Furthermore, where the actuator assembly comprises a mass coupled to a piezoelectric material, the actuator assembly having a geometry which, upon actuation, amplifies the motion in a direction beyond the maximum strain of the piezoelectric material, would also fall within the spirit and scope of the present invention.

FIG. **20***a* depicts an alternative embodiment **900** of the present invention using a voice coil for the driving actuator rather than piezoelectric elements. Voice coil actuator (also referred to as a "voice coil motor") creates low frequency reciprocating motion. The voice coil has a bandwidth of approximately 10-60 Hz and a displacement of up to 10 mm that is dependent upon applied AC voltage. In particular, when an alternating electric current is applied through the conducting coil **902**, the result is a Lorentz Force in a direction defined by a function of the cross-product between the direction of current through the conductive coil **902** and magnetic field vectors of the magnetic member **904**. The force results in a reciprocating motion of the magnetic member **904** relative to the coil support tube **906** which is held in place by the body **910**. With the magnetic member **904** fixed to a driving tube **912**, the driving tube **912** communicates this motion to an extension member **914** which in turn communicates motion to the penetrating member **20**.

A first attachment point **916***a* fixes the distal end of the coil support tube **906** to the body **910**. A second attachment point **916***b* fixes the proximal end of the coil support tube **906** to the body **910**. The conducting coil may be made of different configurations including but not limited to several layers formed by a single wire, several layers formed of different wires either round or other geometric shapes. In a first embodiment of the conducting coil shown in FIG. **20***a*, a first layer of conductive wire is formed by wrapping the wire in a turn-like and spiral fashion and in a radial direction around the coil-support tube with each complete revolution forming a turn next to the previous one and down a first longitudinal direction of the coil support tube. After a predetermined number of turns, an additional layer is formed over the first layer by overlapping a first turn of a second layer of the wire over the last turn of the first layer and, while continuing to wrap the wire in the same radial direction as the first layer, forming a second spiral of wiring with at least the same number of turns as the first layer, each turn formed next to the previous one and in a longitudinal direction opposite to that of the direction in which the first layer was formed. In this embodiment, additional layers may be added by overlapping a first turn of each additional layer of the wire over the last turn of a previous layer and, while continuing to wrap the wire in the same radial direction as the previous layer, forming an additional spiral of wiring with at least the same number of turns as the previous layer, each turn formed next to the previous one and in a longitudinal direction opposite to that of the direction in which the previous layer is formed.

An alternative voice coil embodiment **900***b* is shown in FIG. **20***b*. In particular, in this alternative, the locations of the magnetic member **904** and conductive coil **902** are switched. In other words, the conductive coil is wrapped around and attached to the driving tube **912** and the magnetic member **904** is located along an outside radius of the coil support tube **906**.

An electrical signal is applied at the conductive attachment sites **918** and **920** and causes the formation of the Lorentz force to form in an alternating direction that moves the conductive coil **902** and extension member **914** reciprocally along the longitudinal axis of the device. The conductive coils are physically in contact with the driving tube in this embodiment.

FIG. **20***c* depicts another embodiment of the present invention using a voice coil type actuating mechanism and is of a different configuration than that used in FIGS. **20***a* and **20***b*. For example, in this alternative embodiment, a voice-coil actuating mechanism is substituted with a dual-coil actuating mechanism and as a result of this substitution, the magnetic member **904** of the voice-coil is replaced with second conductive coil **922**. In other words, the second conductive coil **922** is wrapped around and attached to the driving tube **912** and the first conductive coil **902** is located, as in the first preferred embodiment, along an outside radius of the coil support tube **906**. In a first embodiment of the configuration of FIG. **20***c*, the inner coil **922** is conducting direct current DC and the outer coil is conducting alternating current AC. In an alternative embodiment, the inner coil is conducting alternating current AC and the outer coil is conducting direct current DC. In an additional embodiment, both the inner coil and the outer coil are conducting alternating current AC.

In all of the voice coil actuator configurations described, springs may be used to limit and control certain dynamic aspects of the penetrating member **20**. FIG. **20***d* depicts another variation of the voice coil actuator mechanism of the

tenth embodiment using springs, Medical Tool using solenoid actuator **1000**. As with the other voice coil embodiments using coils, the basic principle of actuation is caused by a time varying magnetic field created inside a solenoid coil **1002** which acts on a set of very strong permanent magnets. The magnets **1004** and the entire penetrating member **20** assembly oscillate back and forth through the solenoid coil **1002**. The springs **1014** (such as those shown in FIG. **20***d*) absorb and release energy at each cycle, amplifying the vibration seen at the penetrating member **20**. The resonant properties of the device can be optimized by magnet selection, number of coil turns in the solenoid, mass of the shaft, and the stiffness of the springs.

From the above description, it may be appreciated that the present invention provides significant benefits over conventional medical devices. The configuration of the actuating means described above, such as embodiments comprising a Langevin actuator, Cymbal actuator, or an APA, accommodates the use of piezoelectric actuating members in a medical instrument by enabling the displacement of the penetrating sharps member or needle to such frequencies that cause a reduction of force needed for penetrating through tissue during procedures such as bone biopsy, epidural catheterization or vascular entry. Electrical signal control facilitated by an electrically coupled feedback system could provide the capability of high oscillation rate actuation, control over penetration depth, electrical cut off (faster response than human) and low traction force for these procedures. FIG. **21** depicts, by way of example only, an electrical cut off configuration. A pressure transducer PT monitors the pressure from the penetrating member **20** or of a fluid in communication with the tissue through the present invention. While the penetrating member **20** is penetrating tissue, the pressure detected by the pressure transducer PT is high and the switch S is normally closed. As soon as there is a drop in pressure (indicating passage through the final layer of tissue), the pressure transducer PT signal opens the switch S, thereby cutting off power to the medical tool. In addition, or a visual, audible or tactile indicator immediately activates warning the operator of sufficient passage by the penetrating member **20** and power cut off. It is within the broadest scope of the present invention to encompass a variety of power cut off configurations, including solid state switching and/or digital controls.

Another electrical power cut off implementation detects a forward motion of the biasing element **11** discussed previously. In particular, once the penetrating member **20** passes through the last tissue layer, pressure on the biasing element **11** is relieved and the incremental movement of the biasing element **11** into the body **10** is detected by a sensor which instantly opens the switch S and thereby cuts off electrical power to the present invention.

Additionally, the feedback control of the electronics enables the device to be vibrated in such a way that the force is also reduced as the penetrating member is retracted from the living being as would be necessary in bone biopsy after the tissue is extracted.

Now that exemplary embodiments of the present invention have been shown and described in detail, various modifications and improvements thereon will become readily apparent to those skilled in the art. While the foregoing embodiments may have dealt with the penetration through skin, bone, veins and ligaments as exemplary biological tissues, the present invention can undoubtedly ensure similar effects with other tissues which are commonly penetrated within the body. For example there are multiplicities of other tools like central venous catheter introducers, laparoscopic instruments with associated sharps, cavity drainage catheter kits, and neonatal lancets, as well as procedures like insulin administration and percutaneous glucose testing, to name a few, where embodiments disclosed herein comprising sonically or ultrasonically driven sharps members may be used to precisely pierce or puncture tissues with minimal tinting. Accordingly, the spirit and scope of the present invention is to be construed broadly and limited only by the appended claims, and not by the foregoing specification.

REFERENCE LABELS

A Static needle force curve
B Vibrating needle force curve
G**1** Displacement Graph
LT Langevin actuator (also known as Langevin transducer)
PA**1** Conventional biopsy needle
PA**2** Conventional epidural needle
PA**3** Conventional Syringe
PT Pressure transducer
S Switch
SP Side Port
ZN Zero node
1 Cannula
1' Cannula distal end
2 Stylet
3 Distal tip
4 Stylet tip angled face
5 Tuohy needle
6 Tuohy curved tip
7 Tip opening
9 Front portion
10 Tubular body
11 Biasing element
12 Plunger
14 Inner Stylet
15 Outer trocar tube
16 APA needle
16*b* Alternate embodiment
20 Penetrating member
100 Langevin actuator
110 Horn
111 Support wings
112 Rear mass
114 Piezoelectric elements
114*b* Electrical conductors
115 Sterilization sleeve
116 Bolt
117 Battery & inverter compartment
118 Handle
120 Seal
121 Distal face
122 Distal opening
123 Luer taper nose
124 Proximal opening
126 Bore
126*a* Short bore
128 Attachment fitting
129 Catheter
130 Hollow needle
130*a* Distal end of hollow needle
130*b* Proximal end of hollow needle
132 Plunger handle
134 Plunger shaft
134*a* Proximal end of plunger shaft
134*b* Distal end of plunger shaft
136 Plunger seal
142 Inner stylet handle

144 Inner stylet shaft
146 Inner stylet tip
148 Trocar attachment fitting
150 Outer trocar body
152 Distal trocar opening
154 Distal trocar tip
200 Penetrating introducer
202*b* More preferred embodiment
202*c* Most preferred embodiment
201 Supported introducer
202 Catheterization introducer
300 Bone biopsy device
400 Advanced bone biopsy device
500 APA syringe
500*b* Alternate embodiment
510 Amplified piezoelectric actuator (APA)
512 Frame
512*a* Proximal end of frame
512*b* Distal end of frame
513 Penetrating member
513*a* Proximal end of penetrating member
513*b* Distal tip of penetrating member
514 Piezoelectric material
516 APA attachment point
518 Handle
521 Handle distal opening
524 Handle proximal opening
525 Penetrating member hub
526 APA bore
600 Cymbal syringe
600*b* Alternate embodiment
610 Cymbal actuator
612 Endcap
612*a* Proximal endcap
612*b* Distal endcap
626 Cymbal bore
616 Cymbal attachment point
700 General side port configuration
700*a* First side port configuration
700*b* Second side port configuration
800 Feedback capable reduction of force tool
900 Medical tool using voice coil actuator
900*b* Alternate voice coil embodiment
902 Conducting coil
904 Magnetic member
906 Coil support tube
910 Body
912 Driving tube
914 Extension member
916*a* First attachment point
916*b* Second attachment point
918 First conductive attachment site
920 Second conductive attachment site
922 Second conductive coil
1000 Medical tool using solenoid actuator
1002 Solenoid coil
1004 Magnets
1014 Spring
1020 Pressure feedback system
1021 Reservoir with integrated pump
1022 Flexible tubing
1023 Attachment fitting
1024 Base
1025 On/off switch
1026 Light emitting diode

What is claimed is:

1. A medical device for penetrating living being tissue, said device comprising:

a penetrating member having a hollow channel for receiving fluid therein, said penetrating member being reciprocated away from and into said medical device for reducing the force needed to penetrate living being tissue;

a driving actuator coupled to said penetrating member for converting electrical energy into reciprocating motion when energized;

an electrical power cut off for de-energizing said driving actuator, and

a pressure transducer in electronic communication with said driving actuator and said electrical power cut off which causes said electrical power cut off to de-energize said driving actuator upon detection of a change in fluid pressure within said hollow channel.

2. The medical device of claim **1** wherein said penetrating member is one of a hypodermic needle, catheterization needle, Tuohy needle, bone biopsy trocar, spinal needle, nerve block needle, trocar access ports and interventional radiology needle.

3. The medical device of claim **1** wherein said driving actuator comprises a voice coil coupled to said penetrating member, said voice coil converting electrical energy into oscillatory motion when energized.

4. The medical device of claim **3** wherein said voice coil comprises a coil surrounding permanent magnets and said penetrating member.

5. The medical device of claim **4** further comprising springs positioned on opposite sides of said coil and permanent magnets.

6. The medical device of claim **3** wherein said voice coil comprises permanent magnets surrounding a coil and said penetrating member.

7. The medical device of claim **3** wherein said voice coil comprises a pair of concentric coils surrounding said penetrating member.

8. The medical device of claim **1**, wherein said driving actuator is configured to axially vibrate the penetrating member sinusoidally through living being tissue.

9. The medical device of claim **1**, wherein said electrical power cut off is configured to automatically de-energize said driving actuator upon detection of a preselected change in fluid pressure associated with a particular tissue type.

10. The medical device of claim **1**, wherein said particular tissue type is an epidural space.

11. A medical device for penetrating living being tissue, said device comprising:

a penetrating member which is reciprocated away from and into said medical device for reducing the force needed to penetrate living being tissue;

a driving actuator coupled to said penetrating member for converting electrical energy into reciprocating motion when energized;

an electrical power cut off for automatically de-energizing said driving actuator; and

a fluid pressure transducer mounted on said penetrating member and in fluid communication with said living being tissue, said fluid pressure transducer being in electronic communication with said driving actuator and said electrical power cut off which causes said electrical power cut off to de-energize said driving actuator upon detection of a change in fluid pressure within said living being tissue.

12. The medical device of claim 11 wherein said penetrating member is one of a hypodermic needle, catheterization needle, Tuohy needle, bone biopsy trocar, spinal needle, nerve block needle, trocar access ports and interventional radiology needle.

13. The medical device of claim 11 wherein said driving actuator comprises a voice coil coupled to said penetrating member, said voice coil converting electrical energy into oscillatory motion when energized.

14. The medical device of claim 13 wherein said voice coil comprises a coil surrounding permanent magnets and said penetrating member.

15. The medical device of claim 14 further comprising springs positioned on opposite sides of said coil and permanent magnets.

16. The medical device of claim 13 wherein said voice coil comprises permanent magnets surrounding a coil and said penetrating member.

17. The medical device of claim 13 wherein said voice coil comprises a pair of concentric coils surrounding said penetrating member.

18. The medical device of claim 11, wherein the driving actuator is configured to axially vibrate the penetrating member sinusoidally through living being tissue.

19. The medical device of claim 11, wherein said electrical power cut off is configured to automatically de-energize said driving actuator upon detection of a preselected change in fluid pressure associated with a particular tissue type.

20. The medical device of claim 11, wherein said particular tissue type is an epidural space.

21. A medical device for penetrating living being tissue, said device comprising:

a penetrating member which is reciprocated away from and into said medical device for reducing the force needed to penetrate living being tissue;

a driving actuator coupled to said penetrating member for converting electrical energy into reciprocating motion when energized;

an electrical power cut off for automatically de-energizing said driving actuator; and

a fluid pressure transducer mounted on said penetrating member and in fluid communication with said living being tissue, said fluid pressure transducer being in electronic communication with said driving actuator and said electrical power cut off to de-energize said driving actuator upon detection of a preselected change in fluid pressure adjacent to said penetrating member.

22. The medical device of claim 21 wherein said penetrating member is one of a hypodermic needle, catheterization needle, Tuohy needle, bone biopsy trocar, spinal needle, nerve block needle, trocar access ports and interventional radiology needle.

23. The medical device of claim 21 wherein said driving actuator comprises a voice coil coupled to said penetrating member, said voice coil converting electrical energy into oscillatory motion when energized.

24. The medical device of claim 23 wherein said voice coil comprises a coil surrounding permanent magnets and said penetrating member.

25. The medical device of claim 24 further comprising springs positioned on opposite sides of said coil and permanent magnets.

26. The medical device of claim 23 wherein said voice coil comprises permanent magnets surrounding a coil and said penetrating member.

27. The medical device of claim 23 wherein said voice coil comprises a pair of concentric coils surrounding said penetrating member.

28. The medical device of claim 21, wherein the driving actuator is configured to axially vibrate the penetrating member sinusoidally through living being tissue.

29. The medical device of claim 21, wherein electrical power cut off is configured to automatically de-energize said driving actuator upon detection of a preselected change in fluid pressure associated with a particular tissue type.

30. The medical device of claim 21, wherein said particular tissue type is an epidural space.

* * * * *